P−18572
E0984

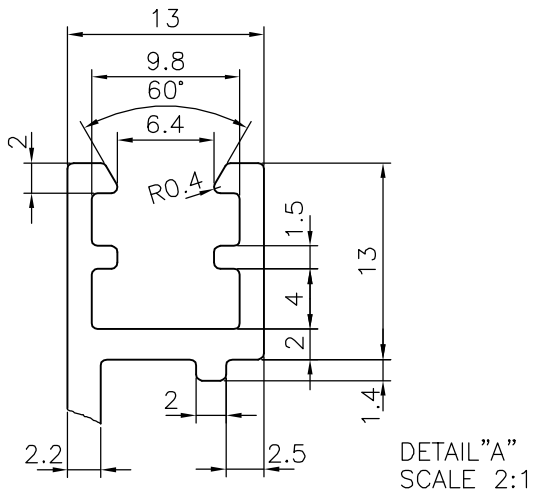

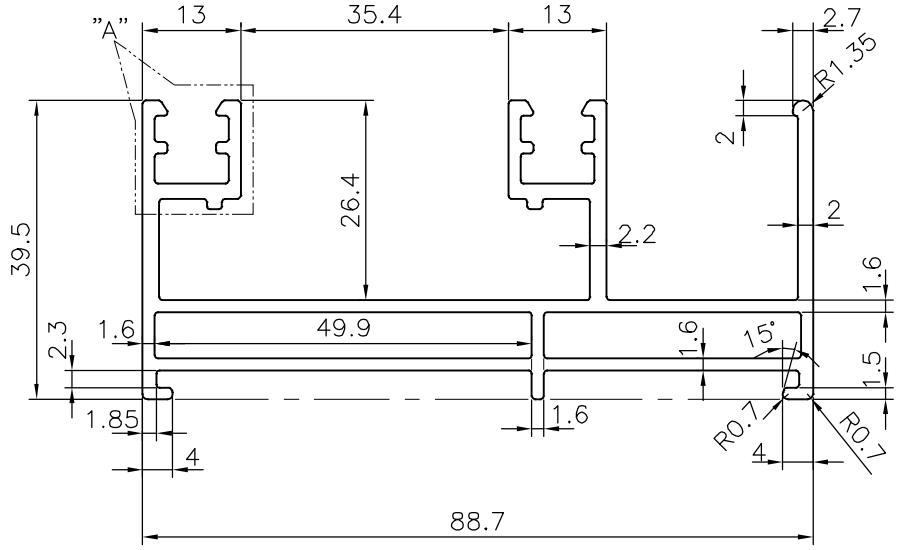

TOLERANCES ON OVERALL DIMENSIONS OF HOLLOW SECTIONS

UPTO 20.0mm − ±0.30	UPTO 80.0mm − ±0.70	UPTO 180.0mm − ±1.27	1. STRAIGHTNESS=1.7mm/M
UPTO 30.0mm − ±0.38	UPTO 100.0mm − ±0.80	UPTO 200.0mm − ±1.40	2. TWIST=1.7mm/M
UPTO 40.0mm − ±0.45	UPTO 120.0mm − ±0.90	UPTO 225.0mm − ±1.52	3. ANGULARITY= ±2°
UPTO 50.0mm − ±0.52	UPTO 140.0mm − ±1.00		4. FLATNESS =0.006xWIDTH
UPTO 60.0mm − ±0.60	UPTO 160.0mm − ±1.14		

SYMBOL OF QUALITY
AN ISO 9001 COMPANY

JINDAL ALUMINIUM LTD.

BANGALORE−560073 (INDIA)

	NAME	DATE
DRAWN	J.P.KAUSHIK	20−08−2018
CHECKED		
APPROVED	B.NATARAJA	16−11−2018

1. ALL DIMENSIONS ARE IN mm.
2. ROUND OFF ALL SHARP CORNERS WITH 0.40 mm.
3. TOLERANCES WILL BE AS PER IS:6477−1983 UNLESS OTHERWISE SPECIFIED

SCALE	1:1
AREA mm^2	601.232
PERIMETER mm.	491.66
WEIGHT kg/m	1.623

PARTY'S NAME	RUSABH ALUMINIUM, THANE
PARTY'S DRAWING No.	AS PER DRAWING
ALLOY & TEMPER	6063 T6
DESCRIPTION	WINDOW SECTION

DRAWING No.	SECTION No.
P−18572	−
E0984	E0984