P–JAL–B–710
E102686

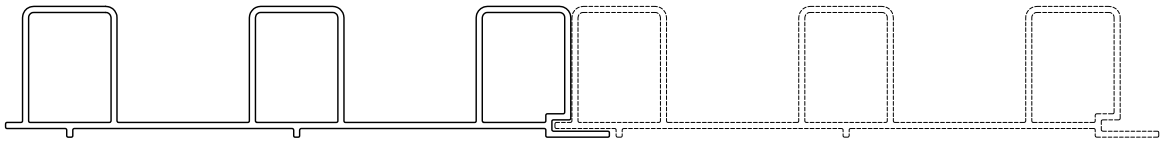

MATCHING
SCALE 1:2

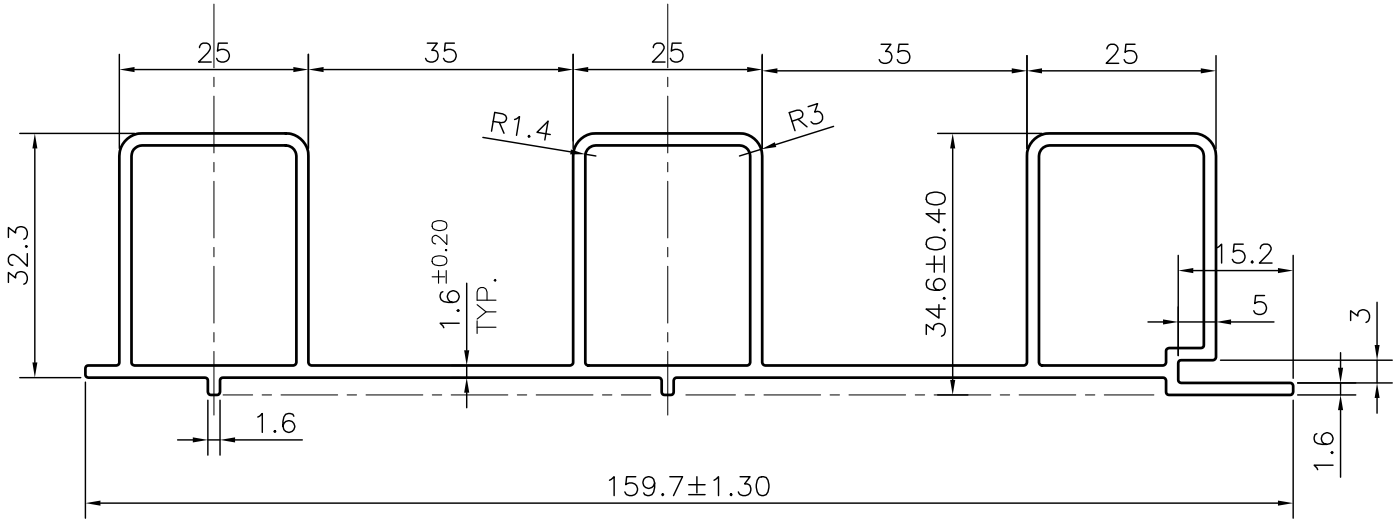

TOLERANCE CHART CD = CIRCUMSCRIBING CIRCLE

DIMENSION	CD≤100	100<CD≤200	200<CD≤300	300<CD≤500
UPTO 10mm	±0.25	±0.30	±0.35	±0.40
10.0 –25.0	±0.30	±0.40	±0.50	±0.60
25.0 –50.0	±0.50	±0.60	±0.80	±0.90
50.0 –100	±0.70	±0.90	±1.10	±1.30
100 – 150	–	±1.10	±1.30	±1.50
150 – 200	–	±1.3	±1.50	±1.80
200 – 300	–	–	±1.70	±2.10
300 – 450	–	–	–	±2.80

Q02254

CONTROLLED COPY

1. STRAIGHTNESS= 1.7mm/M
2. TWIST= 1.7mm/M
3. ANGULARITY= ±2°
4. FLATNESS= 0.007xWIDTH

SYMBOL OF QUALITY
AN ISO 9001 COMPANY

JINDAL ALUMINIUM LTD.

BHIWADI–301019 (INDIA)

	NAME	DATE
DRAWN	ASHUTOSH	17–08–2024
CHECKED	PARVESH	24–08–2024
APPROVED	J.N.RAI	24–08–2024

1. ALL DIMENSIONS ARE IN mm.
2. ROUND OFF ALL SHARP CORNERS WITH 0.40 mm.
3. TOLERANCES WILL BE AS PER BS:EN–755–9 , UNLESS OTHERWISE SPECIFIED

SCALE	1:1
AREA mm^2	665.13
PERIMETER mm.	519.097
WEIGHT kg/m	1.796

PARTY'S NAME	CLASSIC STEEL CRAFT
PARTY'S DRAWING No.	AS PER SAMPLE
ALLOY & TEMPER	6063 T6 — PRODUCT CODE:–056 — HSN CODE:– 76042100
DESCRIPTION	ARCHITECTURAL MISC. SECTION

DRAWING No.	SECTION No.
P–JAL–B–710	7000002888
E102686	E102686