P-JAL-B-783
E102989

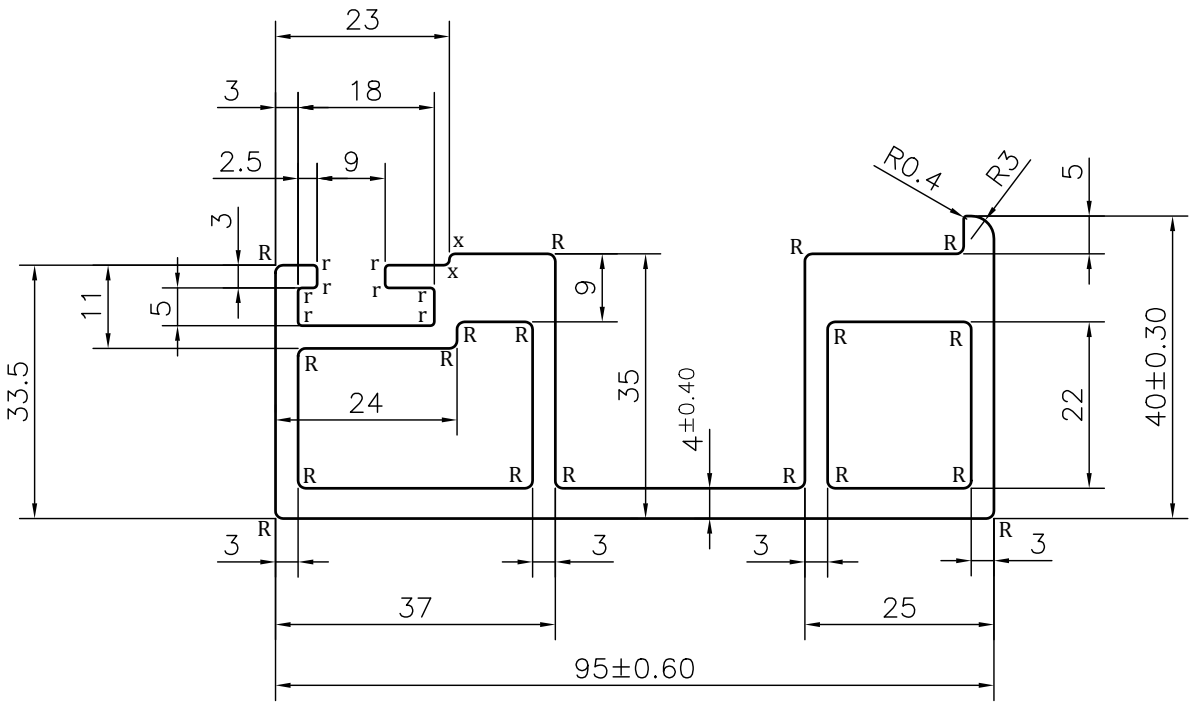

NOTE:-
r= 0.50 RADIUS (8 PLACES)
x= 0.75 RADIUS (2 PLACES)
R= 1.0 RADIUS (17 PLACES)

1. STRAIGHTNESS= 1.7mm/M
2. TWIST= 1.7mm/M
3. ANGULARITY= ±2°
4. FLATNESS= 0.007xWIDTH

Q02216

CONTROLLED COPY

JINDAL
SYMBOL OF QUALITY
AN ISO 9001 COMPANY

JINDAL ALUMINIUM LTD.

BHIWADI-301019 (INDIA)

	NAME	DATE
DRAWN	ASHUTOSH	16-10-2024
CHECKED	PARVESH	02-11-2024
APPROVED	J.N.RAI	02-11-2024

1. ALL DIMENSIONS ARE IN mm.
2. ROUND OFF ALL SHARP CORNERS WITH 0.40 mm.
3. TOLERANCES WILL BE AS PER EN 12020-2 , UNLESS OTHERWISE SPECIFIED

SCALE	1:1
AREA mm^2	1143.322
PERIMETER mm.	358.746
WEIGHT kg/m	3.087

PARTY'S NAME	SIDWAL REFRIGERATION INDIA PVT. LTD.
PARTY'S DRAWING No.	AS PER DRAWING -GL01373
ALLOY & TEMPER	6063 T5 — PRODUCT CODE:-082 — HSN CODE:- 76042100
DESCRIPTION	REFRIGERATION SECTION

DRAWING No.	SECTION No.
P-JAL-B-783	7000003212
E102989	E102989