P–19327
E1030

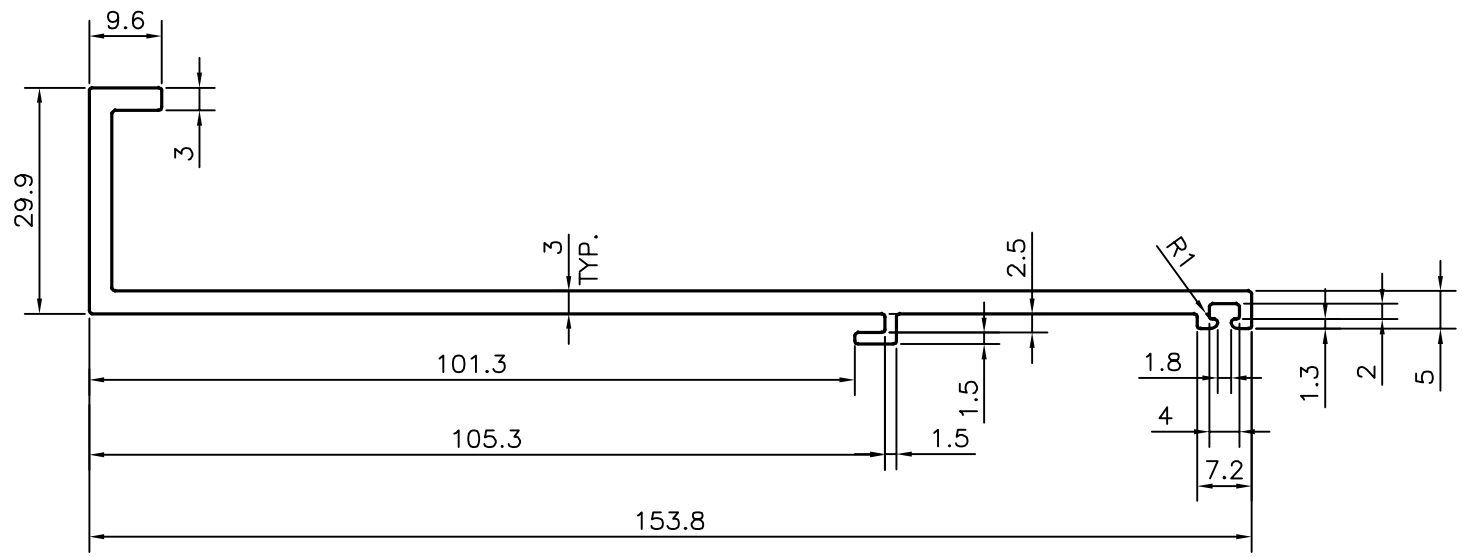

TOLERANCES ON OVERALL WIDTHS & WIDTHS ACROSS FLATS OF BARS, & REGULAR SECTIONS			
UPTO 6.40mm – ±0.20 UPTO 10.0mm – ±0.23 UPTO 12.0mm – ±0.25 UPTO 16.0mm – ±0.28 UPTO 25.0mm – ±0.30	UPTO 32.0mm – ±0.38 UPTO 50.0mm – ±0.46 UPTO 60.0mm – ±0.53 UPTO 80.0mm – ±0.69 UPTO 100.0mm – ±0.75	UPTO 120.0mm – ±0.85 UPTO 160.0mm – ±1.02 UPTO 200.0mm – ±1.14 UPTO 250.0mm – ±1.40 UPTO 300.0mm – ±1.65	**1. STRAIGHTNESS=1.0mm/M** **2. TWIST=1.0mm/M** **3. ANGULARITY= ±1°** **4. FLATNESS =0.007xWIDTH**

			NAME	DATE
JINDAL SYMBOL OF QUALITY AN ISO 9001 COMPANY	*JINDAL ALUMINIUM LTD.* *BANGALORE–560073 (INDIA)*	DRAWN	DARPAN	23–03–2019
		CHECKED		
		APPROVED	B.NATARAJA	30–03–2019

1. ALL DIMENSIONS ARE IN mm.
2. ROUND OFF ALL SHARP CORNERS WITH 0.40 mm.
3. TOLERANCES WILL BE AS PER IS:3965–1981 , UNLESS OTHERWISE SPECIFIED

SCALE	1:1
AREA mm^2	577.477
PERIMETER mm.	406.98
WEIGHT kg/m	1.559

		DRAWING No.	SECTION No.
PARTY'S NAME	ALUFIT (INDIA) PVT. LTD.,BANGALORE		
PARTY'S DRAWING No.	AS PER AUTOCAD DRAWING PROFILE–N–10	P–19327	–
ALLOY & TEMPER	6063 T6	E1030	E1030
DESCRIPTION	FLASHING–3		