P–19290
E1051

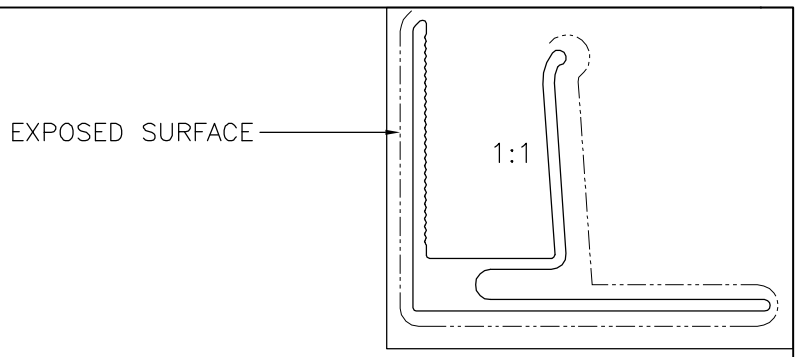

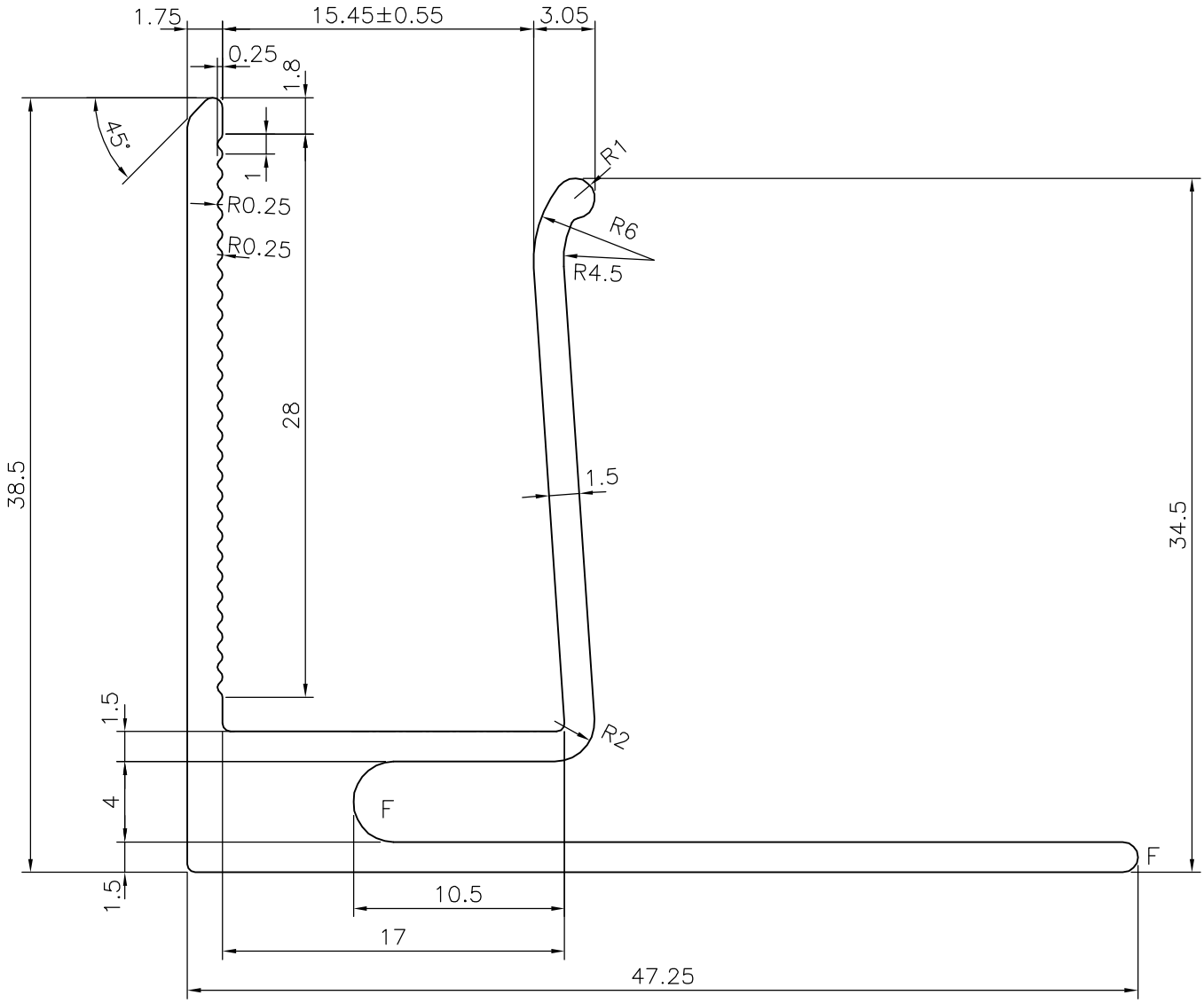

F = FULL RADIUS (2 PLACES)

JINDAL SYMBOL OF QUALITY AN ISO 9001 COMPANY	*JINDAL ALUMINIUM LTD.* *BANGALORE–560073 (INDIA)*		NAME	DATE
		DRAWN	J.P.KAUSHIK	18–03–2019
		CHECKED		
		APPROVED	*B.NATARAJA*	02–04–2019
1. ALL DIMENSIONS ARE IN mm. 2. ROUND OFF ALL SHARP CORNERS WITH 0.40 mm. 3. TOLERANCES WILL BE AS PER BS:EN–755–9 UNLESS OTHERWISE SPECIFIED		SCALE		3:1
		AREA mm^2		228.18
		PERIMETER mm.		250.522
PARTY'S NAME	CLEAR AMBER GROUP,UK	WEIGHT kg/m		0.616
		DRAWING No.		SECTION No.
PARTY'S DRAWING No.	203383	P–19290		–
		E1051		E1051
ALLOY & TEMPER	6063 T6			
DESCRIPTION	MISC. SECTION			