P−19293	
E1054	

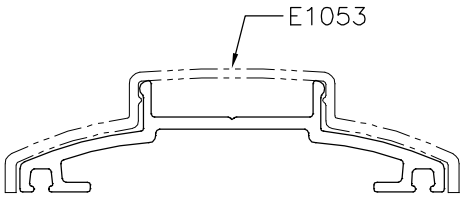

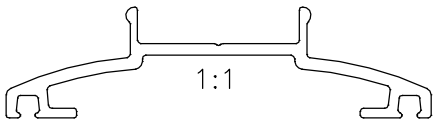

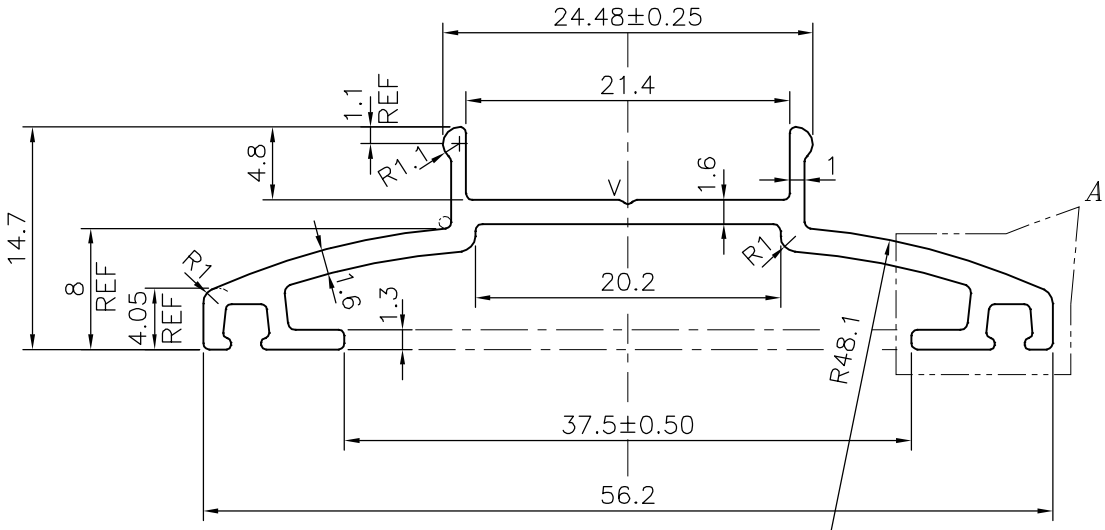

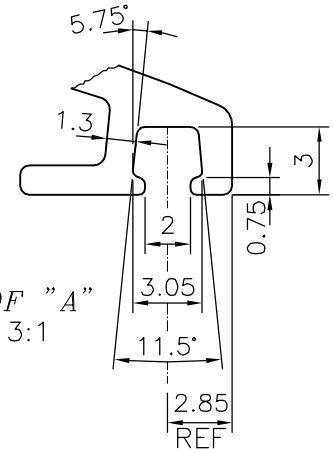

DETAIL OF "A"
SCALE 3:1

V = V GROOVE 0.3x90° (1 PLACE)

			NAME	DATE
JINDAL SYMBOL OF QUALITY AN ISO 9001 COMPANY	*JINDAL ALUMINIUM LTD.* *BANGALORE−560073 (INDIA)*	DRAWN	J.P.KAUSHIK	18−03−2019
		CHECKED		
		APPROVED	*B.NATARAJA*	02−04−2019

1. ALL DIMENSIONS ARE IN mm.
2. ROUND OFF ALL SHARP CORNERS WITH 0.40 mm.
3. TOLERANCES WILL BE AS PER BS:EN−755−9 UNLESS OTHERWISE SPECIFIED

SCALE	2:1
AREA mm^2	136.728
PERIMETER mm.	181.705
WEIGHT kg/m	0.369

PARTY'S NAME	CLEAR AMBER GROUP,UK
PARTY'S DRAWING No.	206666
ALLOY & TEMPER	6063 T6
DESCRIPTION	MISC. SECTION

DRAWING No.	SECTION No.
P−19293	−
E1054	E1054