P−19294
E1055

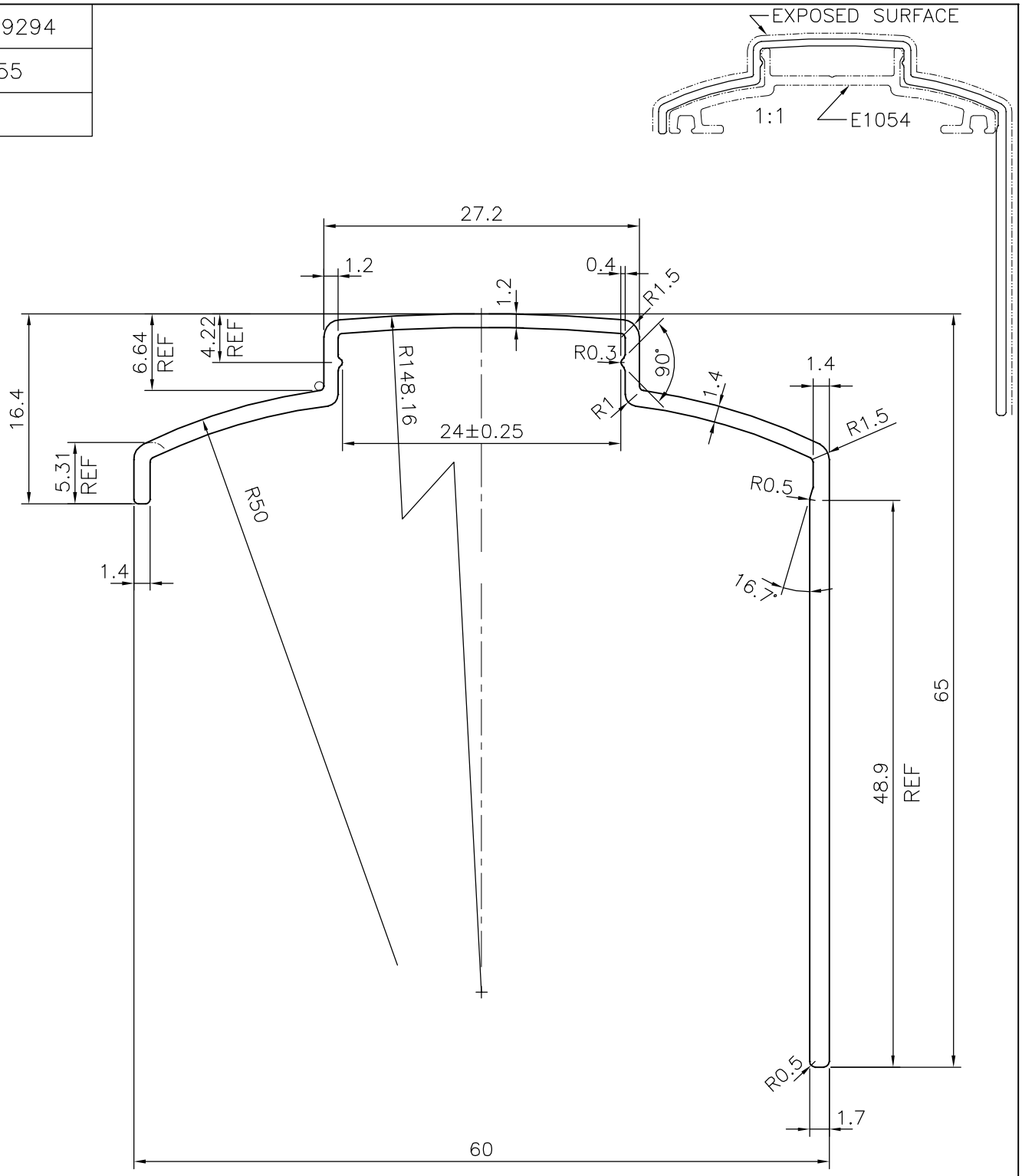

			NAME	DATE
JINDAL SYMBOL OF QUALITY AN ISO 9001 COMPANY	JINDAL ALUMINIUM LTD. BANGALORE−560073 (INDIA)	DRAWN	J.P.KAUSHIK	18−03−2019
		CHECKED		
		APPROVED	B.NATARAJA	02−04−2019

1. ALL DIMENSIONS ARE IN mm.
2. ROUND OFF ALL SHARP CORNERS WITH 0.40 mm.
3. TOLERANCES WILL BE AS PER BS:EN−755−9 UNLESS OTHERWISE SPECIFIED

SCALE	2:1
AREA mm^2	187.621
PERIMETER mm.	259.235
WEIGHT kg/m	0.507

PARTY'S NAME	CLEAR AMBER GROUP,UK
PARTY'S DRAWING No.	206671
ALLOY & TEMPER	6063 T6
DESCRIPTION	MISC. SECTION

DRAWING No.	SECTION No.
P−19294	−
E1055	E1055