P−19314
E1059

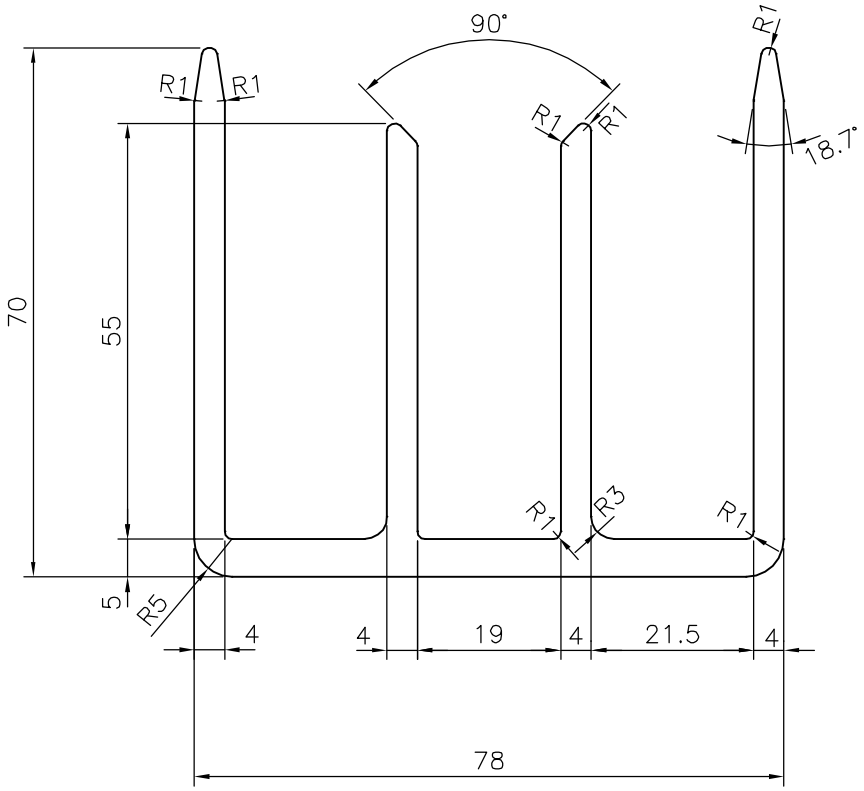

JINDAL SYMBOL OF QUALITY AN ISO 9001 COMPANY	*JINDAL ALUMINIUM LTD.* *BANGALORE−560073 (INDIA)*		NAME	DATE
		DRAWN	J.P.KAUSHIK	23−03−2019
		CHECKED		
		APPROVED	*B.NATARAJA*	02−04−2019
1. ALL DIMENSIONS ARE IN mm. 2. ROUND OFF ALL SHARP CORNERS WITH 0.40 mm. 3. TOLERANCES WILL BE AS PER BS:EN−755−9 UNLESS OTHERWISE SPECIFIED		SCALE		1:1
		AREA mm^2		1320.111
		PERIMETER mm.		627.966
PARTY'S NAME	CLEAR AMBER GROUP, UK	WEIGHT kg/m		3.564
		DRAWING No.		SECTION No.
PARTY'S DRAWING No.	CA EXTRUSION 041 REV. V1.01	P−19314		−
		E1059		E1059
ALLOY & TEMPER	6063 T6			
DESCRIPTION	MISC. SECTION			