P–19598	
E1125	

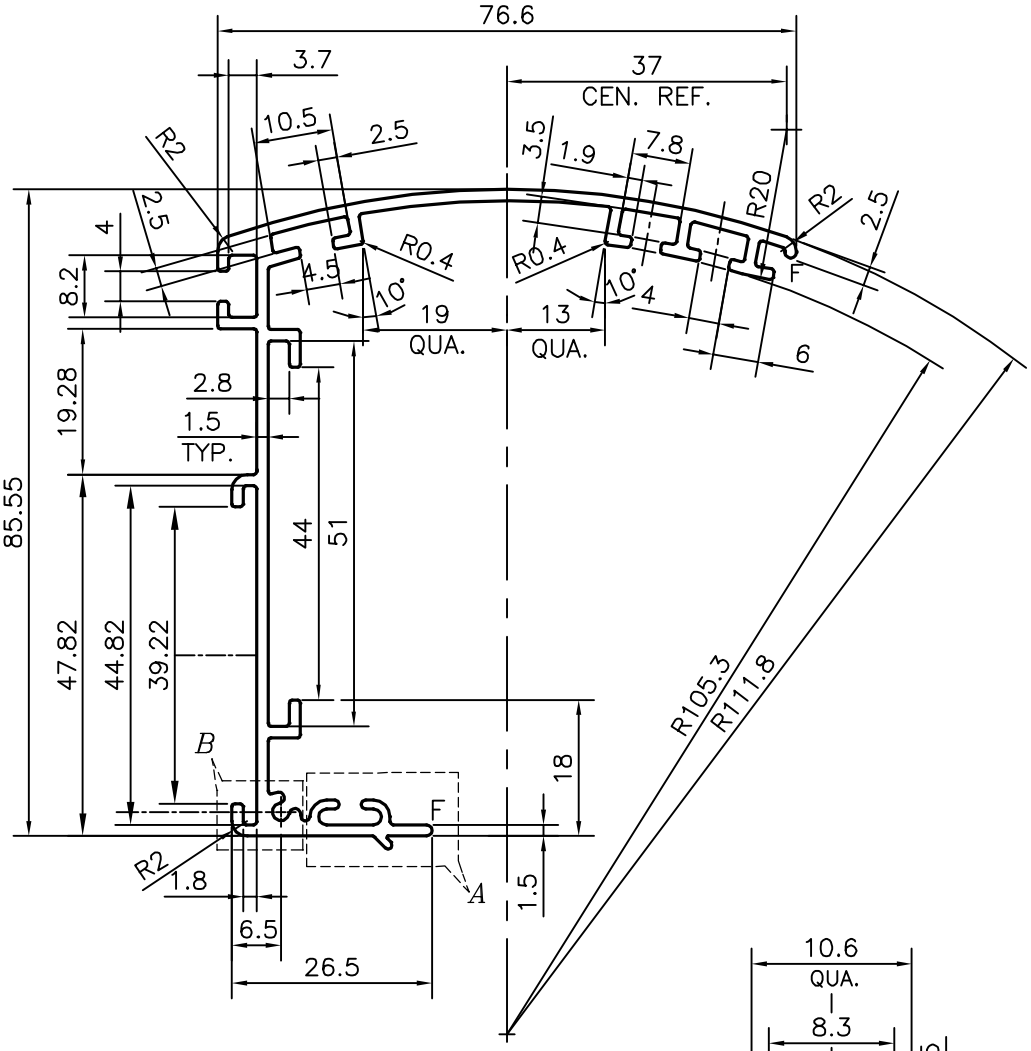

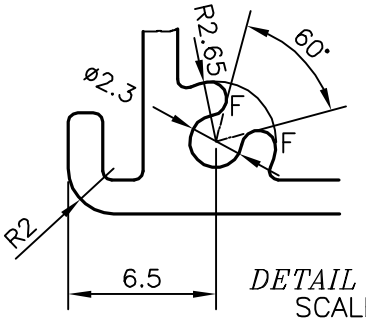

DETAIL OF "B"
SCALE 3:1

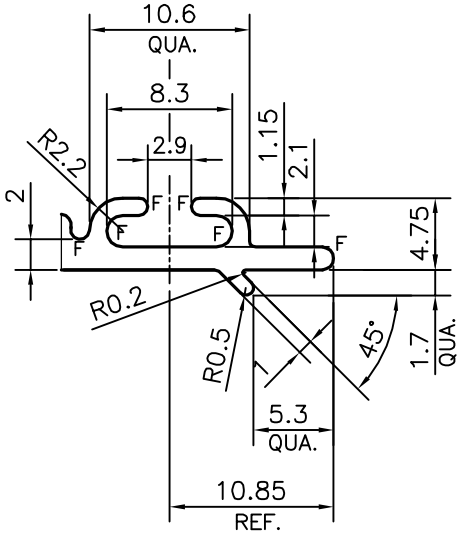

DETAIL OF "A"
SCALE 2:1

F= FULL RADIUS (10 PLACE)

			NAME	DATE
JINDAL SYMBOL OF QUALITY AN ISO 9001 COMPANY	*JINDAL ALUMINIUM LTD.* *BANGALORE–560073 (INDIA)*	DRAWN	DARPAN	30–05–2019
		CHECKED		
		APPROVED	B.NATARAJA	06–06–2019

1. ALL DIMENSIONS ARE IN mm.
2. ROUND OFF ALL SHARP CORNERS WITH 0.40 mm.
3. TOLERANCES WILL BE AS PER IS:3965–1981 , UNLESS OTHERWISE SPECIFIED

SCALE	1:1
AREA mm^2	410.072
PERIMETER mm.	516.282
WEIGHT kg/m	1.107

PARTY'S NAME	MAC LIFESYLE PRODUCT LTD., NEW DELHI
PARTY'S DRAWING No.	AS PER SAMPLE & REQUIREMENT
ALLOY & TEMPER	6063 T6
DESCRIPTION	VENETIAN BLIND SECTION

DRAWING No.	SECTION No.
P–19598	–
E1125	E1125