P-20016-1
E1165

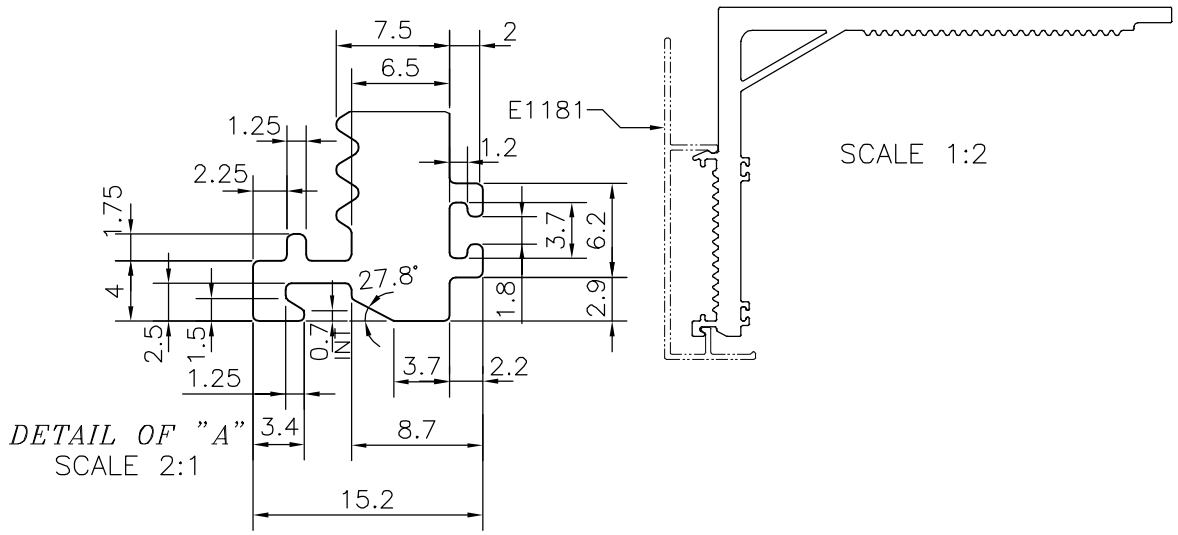

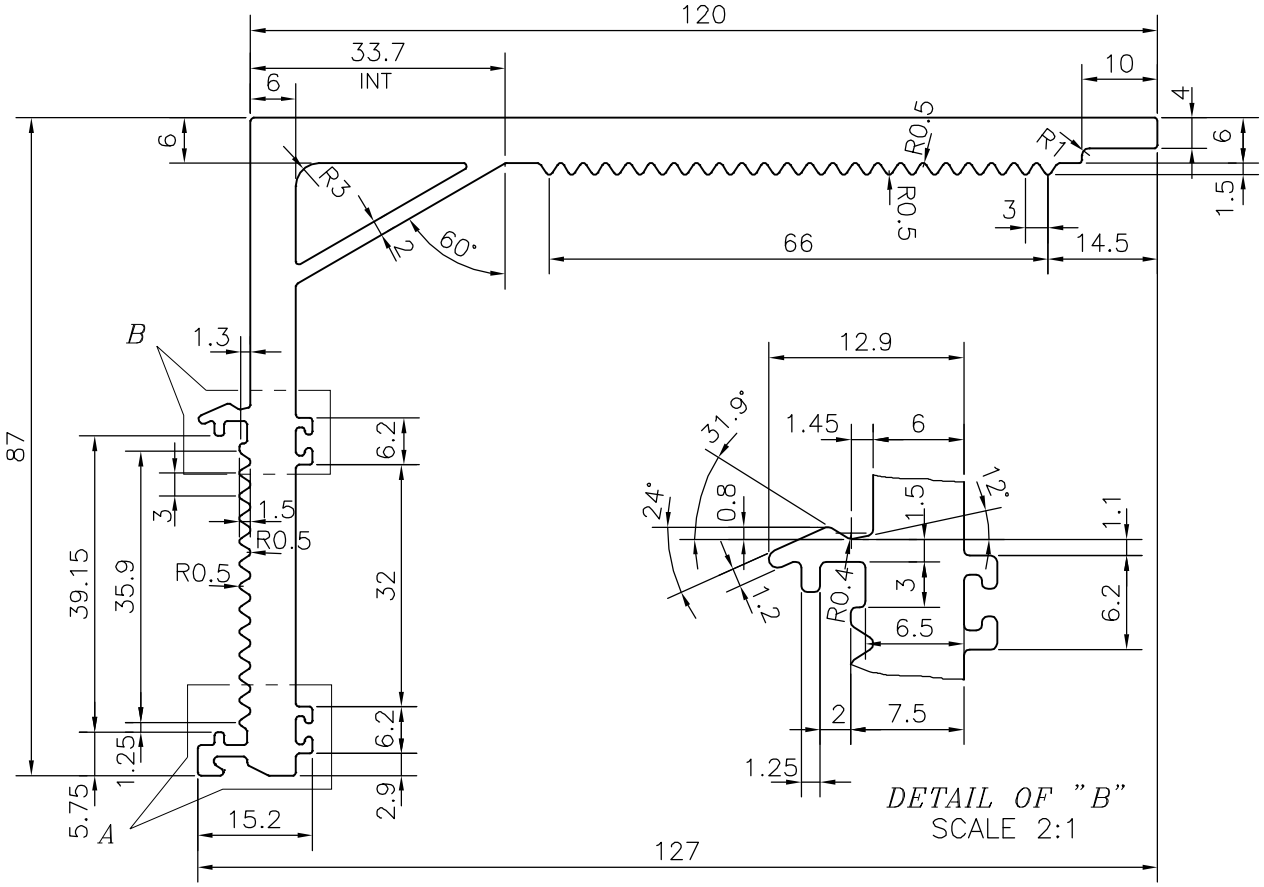

TOLERANCES ON OVERALL WIDTHS & WIDTHS ACROSS FLATS OF BARS, & REGULAR SECTIONS

UPTO 6.40mm – ±0.20	UPTO 32.0mm – ±0.38	UPTO 120.0mm – ±0.85	1. STRAIGHTNESS=1.0mm/M
UPTO 10.0mm – ±0.23	UPTO 50.0mm – ±0.46	UPTO 160.0mm – ±1.02	2. TWIST=1.0mm/M
UPTO 12.0mm – ±0.25	UPTO 60.0mm – ±0.53	UPTO 200.0mm – ±1.14	3. ANGULARITY= ±1°
UPTO 16.0mm – ±0.28	UPTO 80.0mm – ±0.69	UPTO 250.0mm – ±1.40	4. FLATNESS =0.007xWIDTH
UPTO 25.0mm – ±0.30	UPTO 100.0mm – ±0.75	UPTO 300.0mm – ±1.65	

JINDAL

SYMBOL OF QUALITY
AN ISO 9001 COMPANY

JINDAL ALUMINIUM LTD.

BANGALORE-560073 (INDIA)

	NAME	DATE
DRAWN	J.P.KAUSHIK	30-08-2019
CHECKED		
APPROVED	B.NATARAJA	09-09-2019

1. ALL DIMENSIONS ARE IN mm.
2. ROUND OFF ALL SHARP CORNERS WITH 0.40 mm.
3. TOLERANCES WILL BE AS PER IS:6477-1983 UNLESS OTHERWISE SPECIFIED

SCALE	1:1
AREA mm^2	1378.865
PERIMETER mm.	511.212
WEIGHT kg/m	3.723

PARTY'S NAME	ALUFIT (INDIA) PVT. LTD., BANGALORE
PARTY'S DRAWING No.	OP-DIE-17
ALLOY & TEMPER	6063 T6
DESCRIPTION	ANGLE BRACKET SECTION

DRAWING No.	SECTION No.
P-20016-1	–
E1165	E1165