P−20140	
E1190	

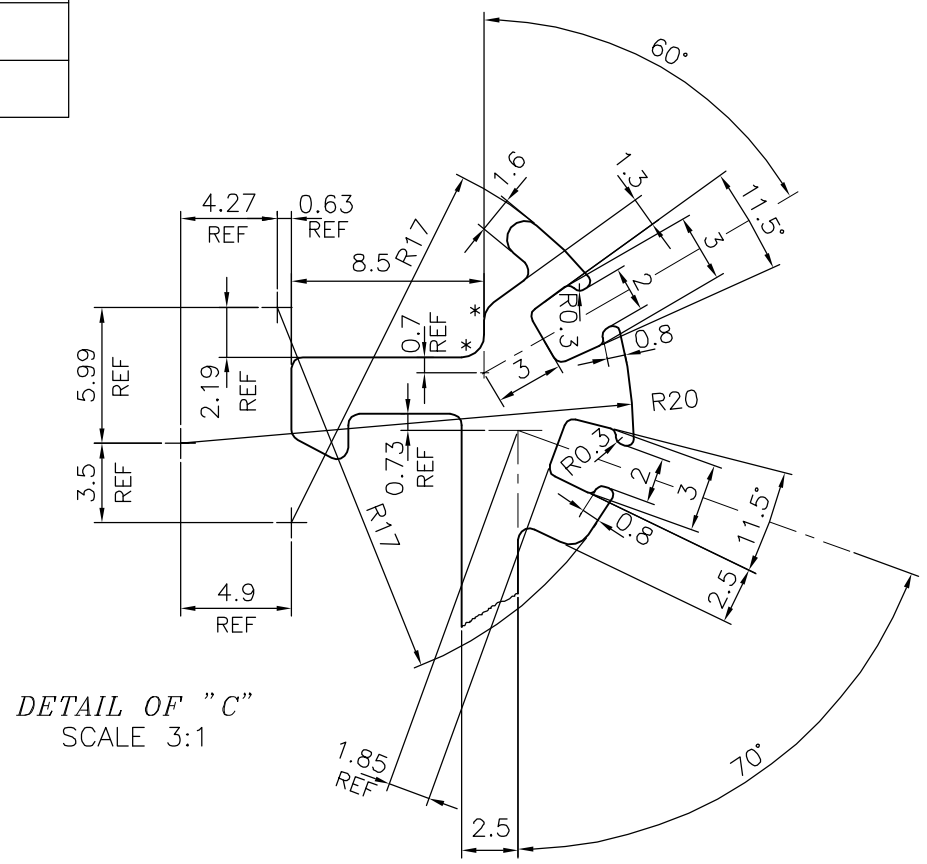

DETAIL OF "C"
SCALE 3:1

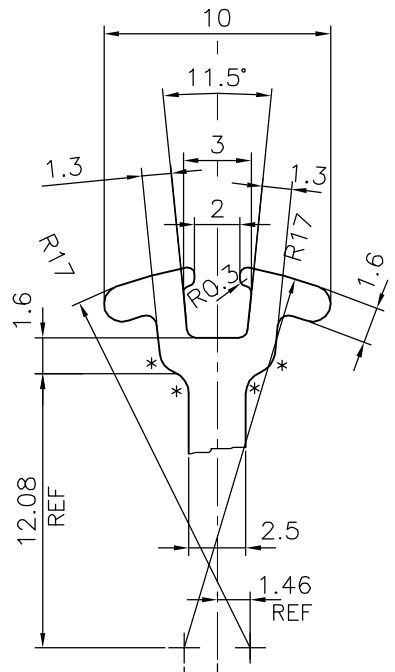

DETAIL OF "B"
SCALE 3:1

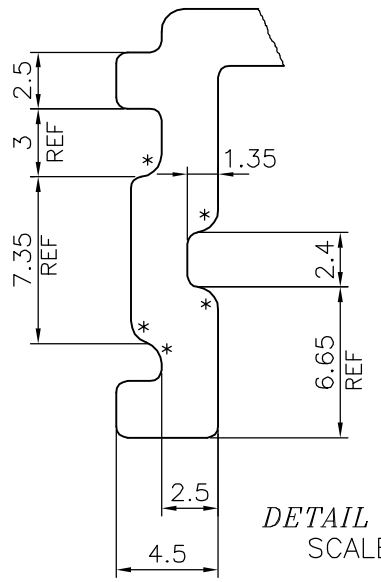

DETAIL OF "A"
SCALE 3:1

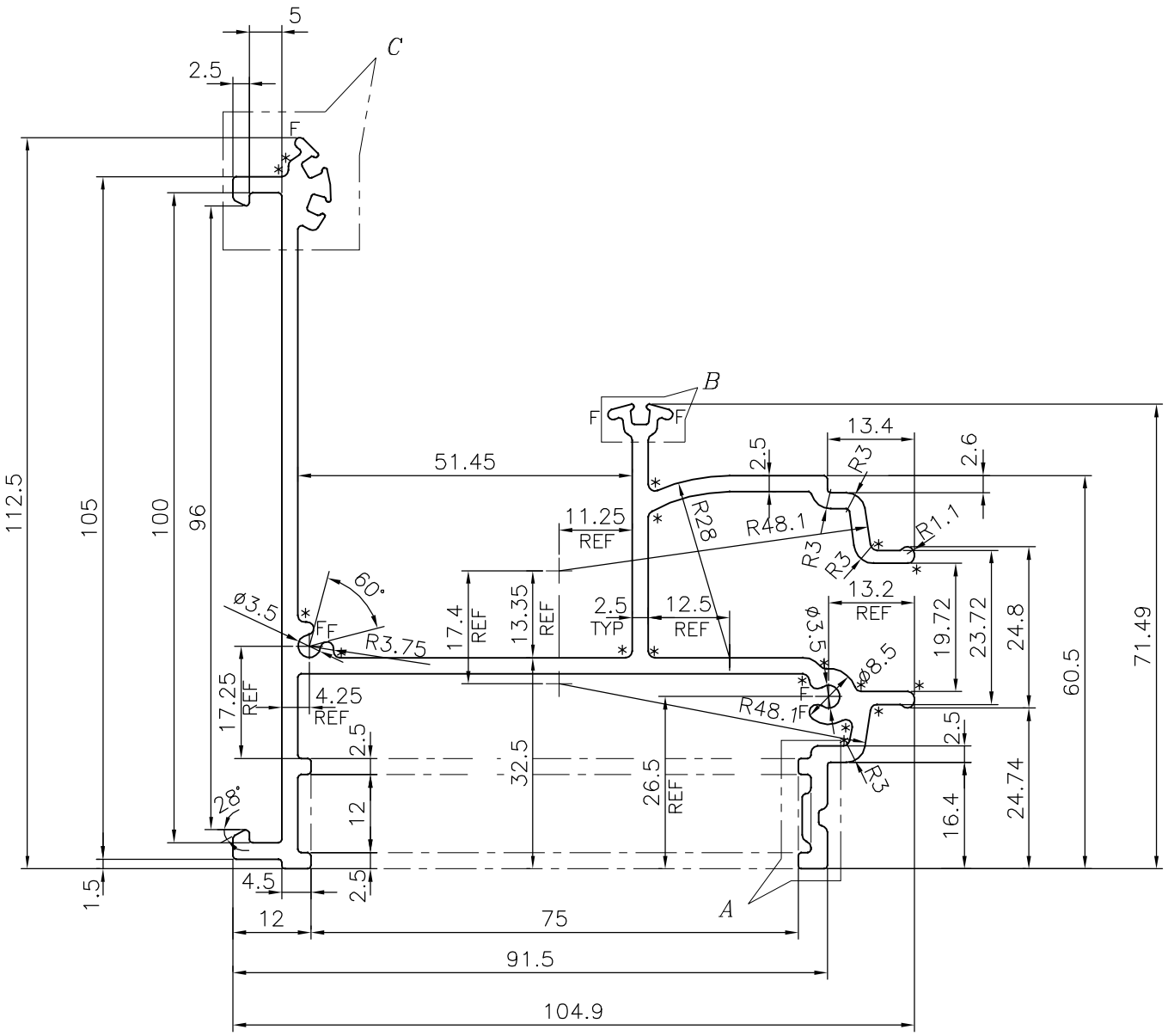

* = 1.0 RADIUS (22 PLACES)
F = FULL RADIUS (4 PLACES)
UNSPECIFIED RADIUS 0.5 mm

TOLERANCE CHART CD = CIRCUMSCRIBING CIRCLE

CD≤100	100<CD≤200	200<CD≤300	300<CD≤500
UPTO 10mm − ±0.25	±0.30	±0.35	±0.40
10.0 −25.0 − ±0.30	±0.40	±0.50	±0.60
25.0 −50.0 − ±0.50	±0.60	±0.80	±0.90
50.0 −100.0 − ±0.70	±0.90	±1.10	±1.30
100 − 150 − −	±1.10	±1.30	±1.50
150 − 200 − −	±1.3	±1.50	±1.80
200 − 300 − −	−	±1.70	±2.10
300 − 450 − −	−	−	±2.80

EXPOSED SURFACE

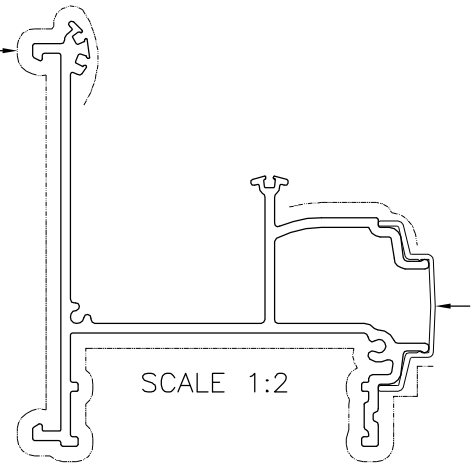

E1049

SCALE 1:2

JINDAL
SYMBOL OF QUALITY
AN ISO 9001 COMPANY

JINDAL ALUMINIUM LTD.

BANGALORE−560073 (INDIA)

1. ALL DIMENSIONS ARE IN mm.
2. ROUND OFF ALL SHARP CORNERS WITH 0.40 mm.
3. TOLERANCES WILL BE AS PER BS:EN−755−9 UNLESS OTHERWISE SPECIFIED

PARTY'S NAME	CLEAR AMBER GROUP, UK
PARTY'S DRAWING No.	209905
ALLOY & TEMPER	6063 T6
DESCRIPTION	MISC. SECTION

	NAME	DATE
DRAWN	J.P.KAUSHIK	14−09−2019
CHECKED		
APPROVED	B.NATARAJA	20−09−2019
SCALE		1:1
AREA mm^2		958.708
PERIMETER mm.		757.569
WEIGHT kg/m		2.589

DRAWING No.	SECTION No.
P−20140	−
E1190	E1190