P-19992-2
E1191

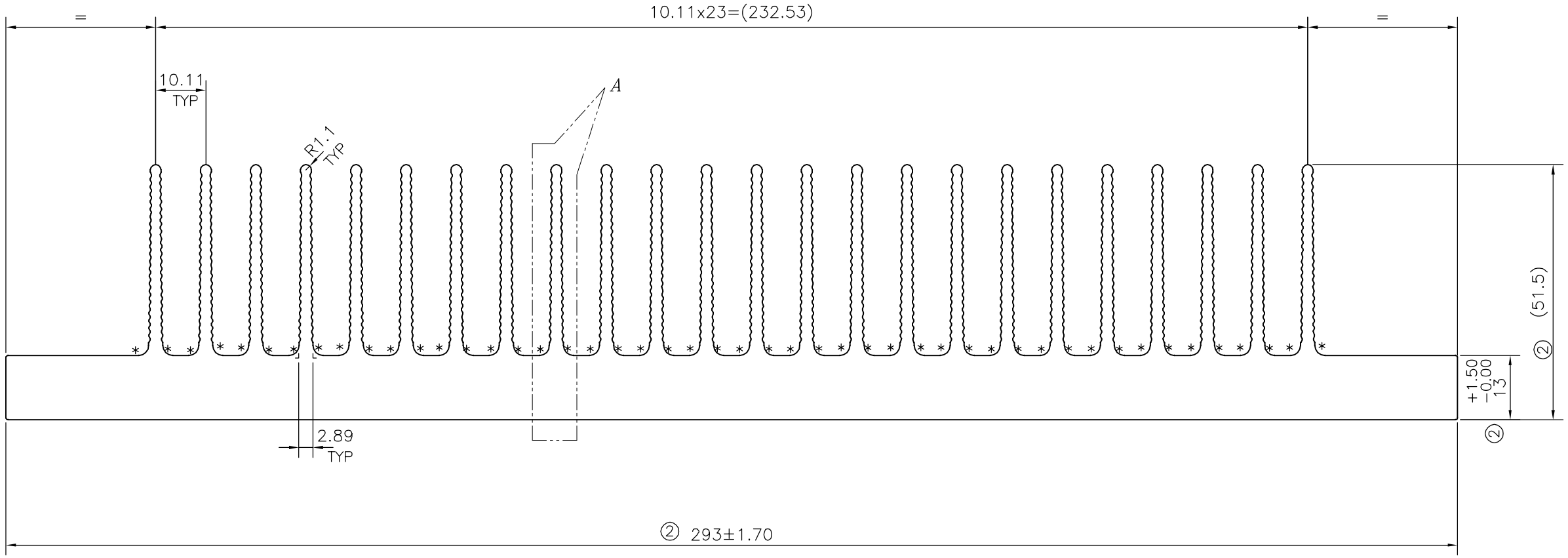

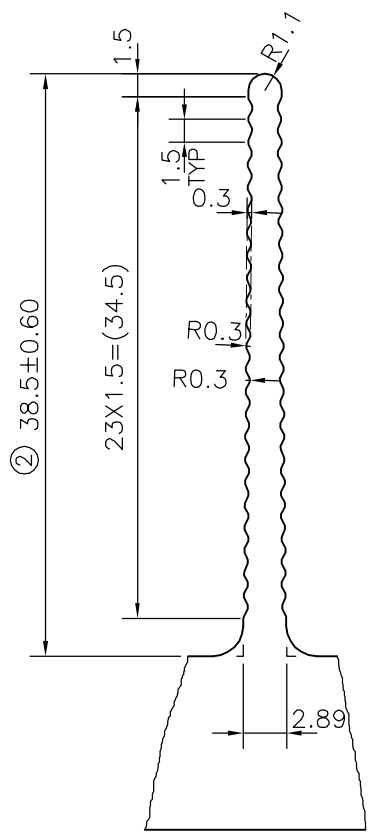

DETAIL OF "A"
SCALE 2:1

ISSUE-2

DIMENSION CHANGED FROM 11.5mm TO 13.0 mm,50 TO 51.5 & 292 TO 293 mm

WEIGHT ALSO CHANGED FROM 14.795 TO 16.013 kg/m

1. STRAIGHTNESS=1.7mm/M
2. TWIST=1.7mm/M
3. FLATNESS =1.5mm

* = 2.0 RADIUS (48 PLACES)

JINDAL SYMBOL OF QUALITY AN ISO 9001 COMPANY	*JINDAL ALUMINIUM LTD.* *BANGALORE-560073 (INDIA)*		NAME	DATE
		DRAWN	J.P.KAUSHIK	23-10-2019
		CHECKED		
		APPROVED	*B.NATARAJA*	24-10-2019
1. ALL DIMENSIONS ARE IN mm. 2. ROUND OFF ALL SHARP CORNERS WITH 0.40 mm. 3. TOLERANCES WILL BE AS PER IS:3965-1981 , UNLESS OTHERWISE SPECIFIED		SCALE		1:1
		AREA mm^2		5930.788
		PERIMETER mm.		2523.041
		WEIGHT kg/m		16.013
PARTY'S NAME	SFO TECHNOLOGIES PVT. LTD., COCHIN	DRAWING No.		SECTION No.
PARTY'S DRAWING No.	N763521-C2D1 REV. 0.9	P-19992-2		-
ALLOY & TEMPER	6063 T6	E1191		E1191(ISSUE-2)
DESCRIPTION	HEAT SINK SECTION			