P–19728
S6354
E1224

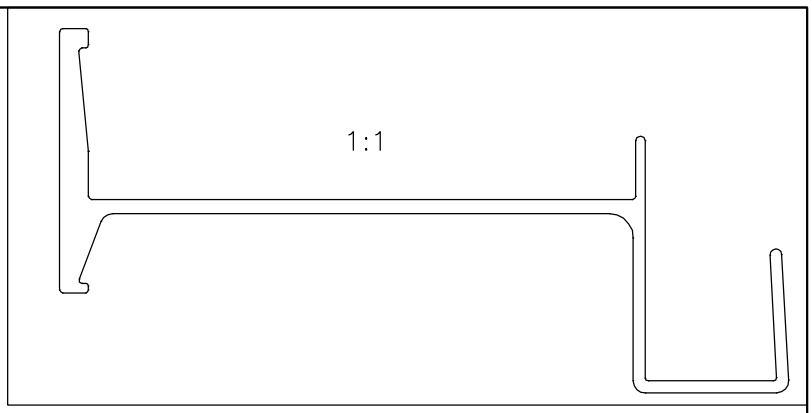

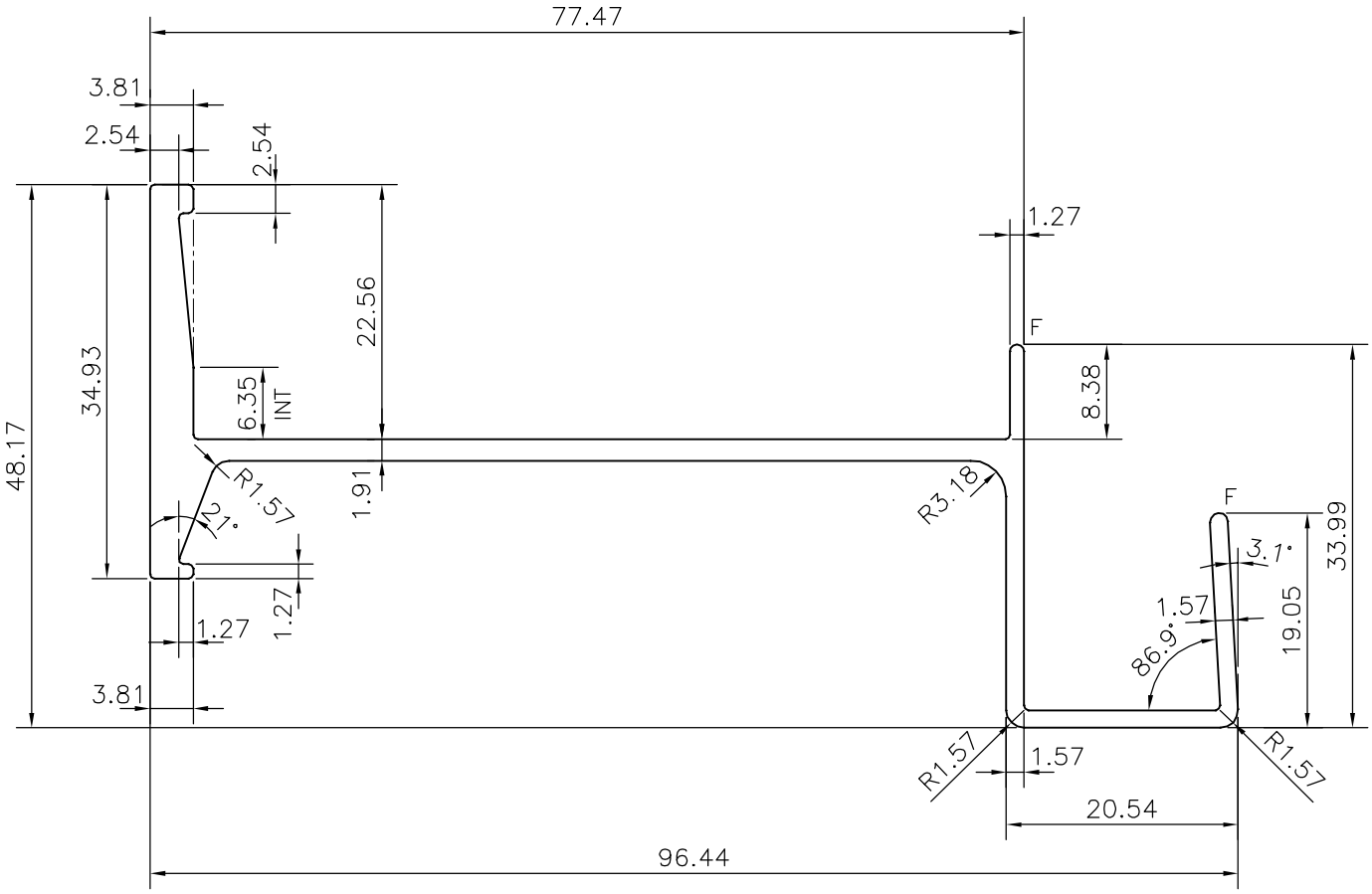

F = FULL RADIUS (2 PLACES)

			NAME	DATE
SYMBOL OF QUALITY AN ISO 9001 COMPANY	*JINDAL ALUMINIUM LTD.* *BANGALORE–560073 (INDIA)*	DRAWN	J.P.KAUSHIK	05–07–2019
		CHECKED		
		APPROVED	J.N. RAI	13–07–2019

1. ALL DIMENSIONS ARE IN mm.
2. ROUND OFF ALL SHARP CORNERS WITH 0.40 mm.
3. TOLERANCES WILL BE AS PER IS:3965–1981 , UNLESS OTHERWISE SPECIFIED

SCALE	1.5:1
AREA mm^2	373.768
PERIMETER mm.	356.767
WEIGHT kg/m	1.009

		DRAWING No.	SECTION No.
PARTY'S NAME	VIJAY ENGINEERING WORKS, JALANDHAR		
PARTY'S DRAWING No.	AS PER DRAWING	P–19728	–
ALLOY & TEMPER	6061 T6	S6354	S6354
		E1224	E1224
DESCRIPTION	MISC. SECTION		