P–20051–2
E1238

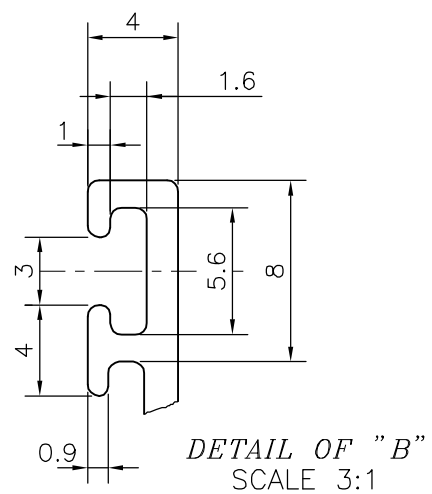

DETAIL OF "B"
SCALE 3:1

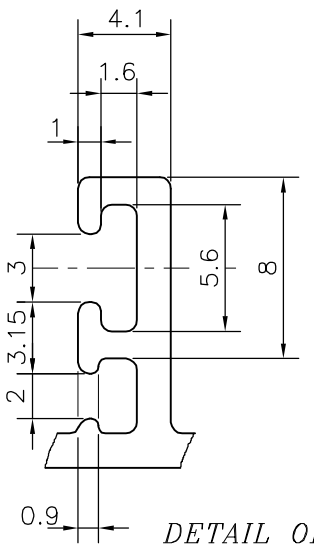

DETAIL OF "A"
SCALE 3:1

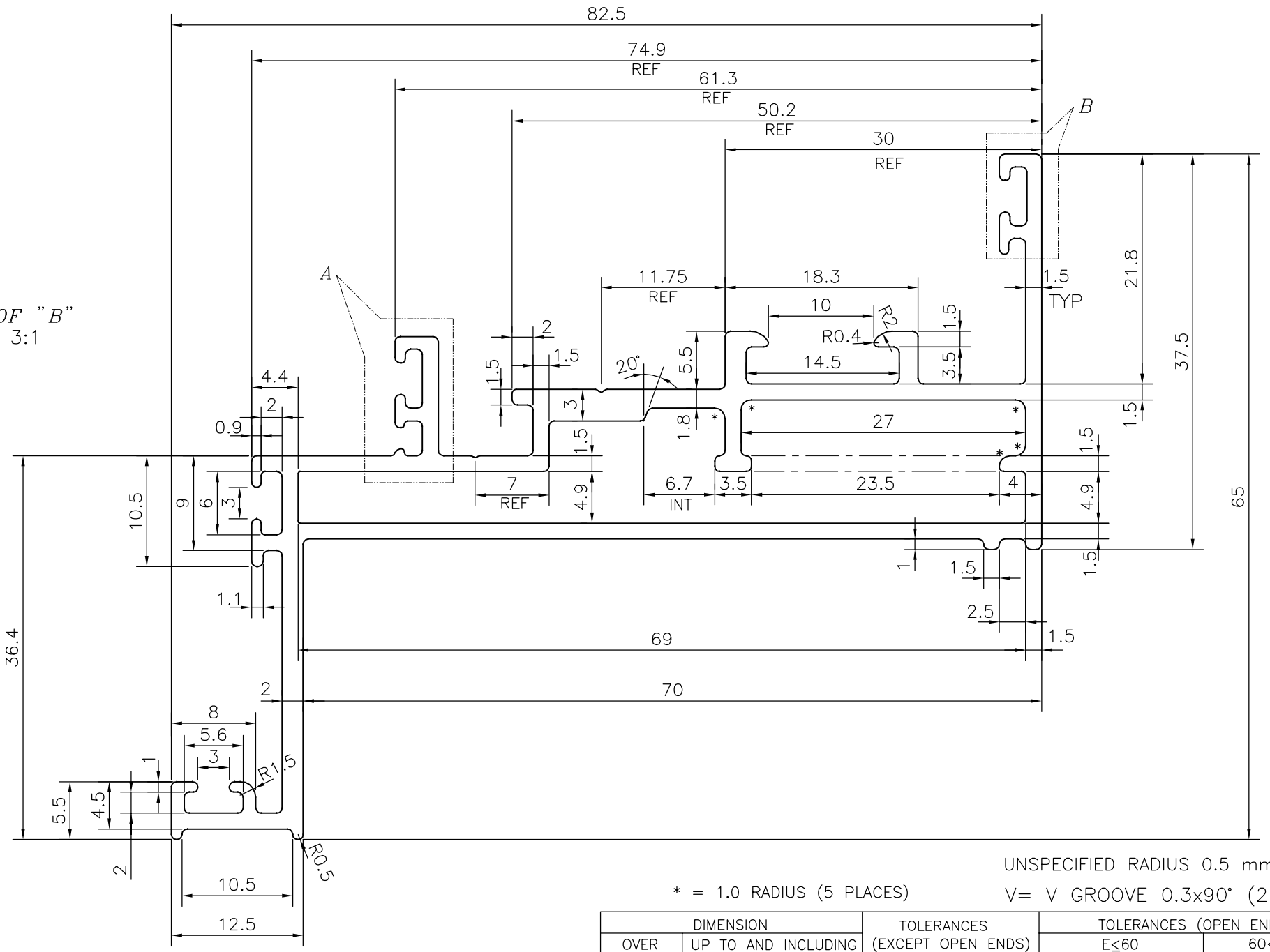

UNSPECIFIED RADIUS 0.5 mm

* = 1.0 RADIUS (5 PLACES)

V= V GROOVE 0.3x90° (2 PLACES)

DIMENSION		TOLERANCES	TOLERANCES (OPEN ENDS)	
OVER	UP TO AND INCLUDING	(EXCEPT OPEN ENDS)	E≤60	60<E≤120°
–	10	±0.15	±0.15	–
10	15	±0.20	±0.20	–
15	30	±0.25	±0.25	–
30	45	±0.30	±0.30	±0.45
45	60	±0.40	±0.40	±0.55
60	90	±0.45	±0.45	±0.65
90	120	±0.60	±0.60	±0.80
120	150	±0.80	±0.80	±1.0
150	180	±1.0	±1.0	±1.3
180	240	±1.2	±1.2	±1.5
240	300	±1.5	±1.5	±1.8

EXPOSED SURFACE

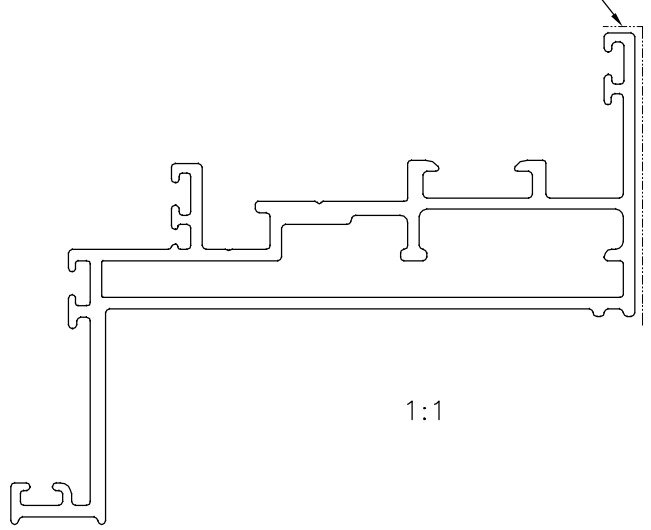

1:1

JINDAL
SYMBOL OF QUALITY
AN ISO 9001 COMPANY

JINDAL ALUMINIUM LTD.
BANGALORE–560073 (INDIA)

	NAME	DATE
DRAWN	J.P.KAUSHIK	11–09–2019
CHECKED		
APPROVED	B.NATARAJA	16–11–2019

1. ALL DIMENSIONS ARE IN mm.
2. ROUND OFF ALL SHARP CORNERS WITH 0.40 mm.
3. TOLERANCES WILL BE AS PER BS:EN–12020–2 UNLESS OTHERWISE SPECIFIED

SCALE	2:1
AREA mm^2	478.744
PERIMETER mm.	411.736
WEIGHT kg/m	1.293

PARTY'S NAME	EUROPEAN FACADE PRODUCTS, NETHERLANDS
PARTY'S DRAWING No.	EFP 65 UNITISED SSG–15.183
ALLOY & TEMPER	6063 T6
DESCRIPTION	FRAME 94 mm,65.2,24mm GLASS SECTION

DRAWING No.	SECTION No.
P–20051–2	–
E1238	E1238