P–20053–2
E1240

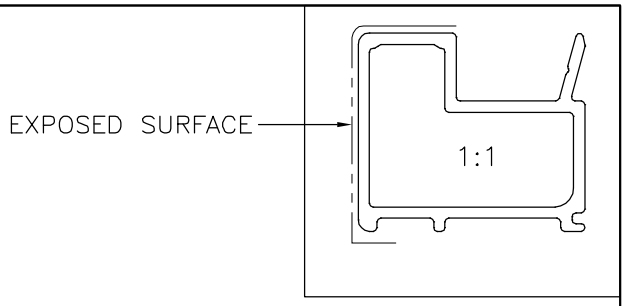

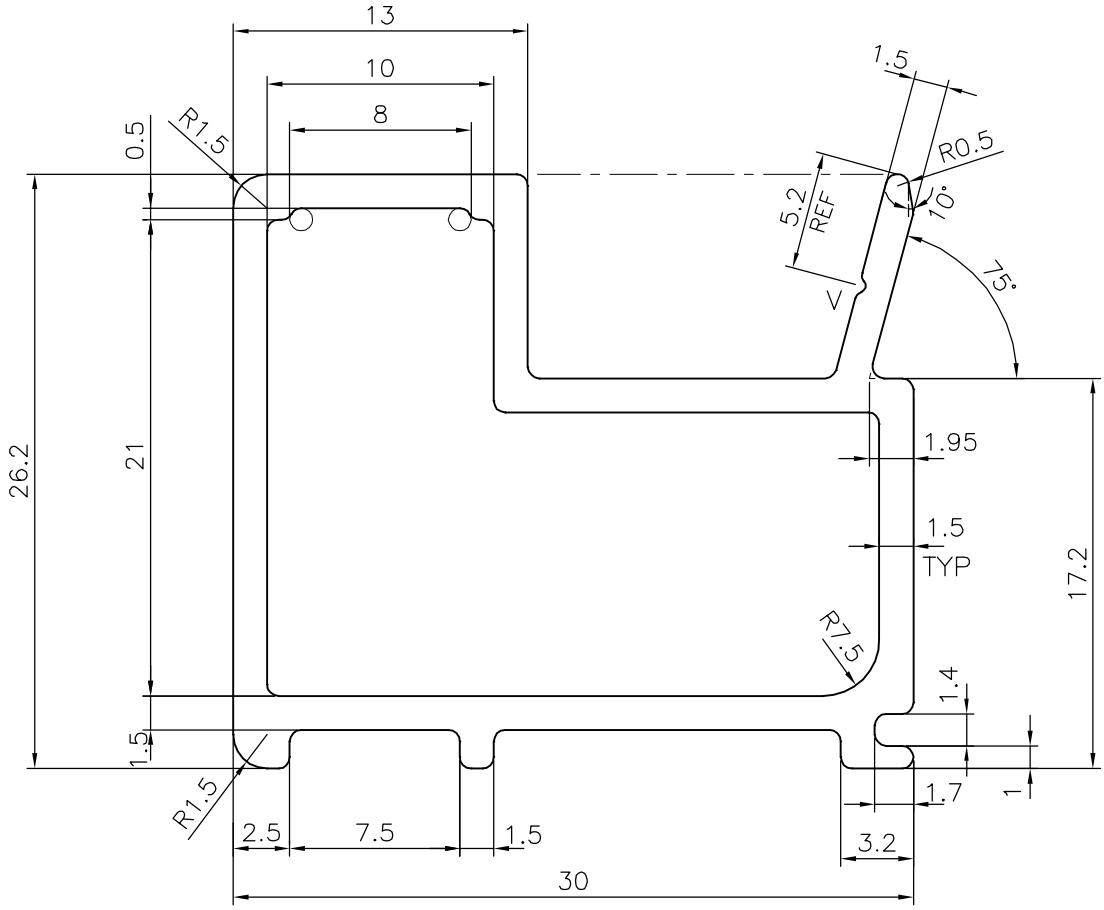

UNSPECIFIED RADIUS 0.5 mm

V= V GROOVE 0.3x90° (1 PLACE)

DIMENSION		TOLERANCES	TOLERANCES (OPEN ENDS)	
OVER	UP TO AND INCLUDING	(EXCEPT OPEN ENDS)	E≤60	60<E≤120[a]
–	10	±0.15	±0.15	–
10	15	±0.20	±0.20	–
15	30	±0.25	±0.25	–
30	45	±0.30	±0.30	±0.45
45	60	±0.40	±0.40	±0.55
60	90	±0.45	±0.45	±0.65
90	120	±0.60	±0.60	±0.80
120	150	±0.80	±0.80	±1.0
150	180	±1.0	±1.0	±1.3
180	240	±1.2	±1.2	±1.5
240	300	±1.5	±1.5	±1.8

JINDAL

SYMBOL OF QUALITY
AN ISO 9001 COMPANY

JINDAL ALUMINIUM LTD.

BANGALORE–560073 (INDIA)

	NAME	DATE
DRAWN	J.P.KAUSHIK	11–09–2019
CHECKED		
APPROVED	B.NATARAJA	16–11–2019

1. ALL DIMENSIONS ARE IN mm.
2. ROUND OFF ALL SHARP CORNERS WITH 0.40 mm.
3. TOLERANCES WILL BE AS PER BS:EN–12020–2 , UNLESS OTHERWISE SPECIFIED

SCALE	3:1
AREA mm^2	179.098
PERIMETER mm.	135.172
WEIGHT kg/m	0.484

PARTY'S NAME	EUROPEAN FACADE PRODUCTS, NETHERLANDS
PARTY'S DRAWING No.	EFP 65 UNITISED SYSTEM–18.406
ALLOY & TEMPER	6063 T6
DESCRIPTION	JAMB PROFILE EFP 18.406 SECTION

DRAWING No.	SECTION No.
P–20053–2	–
E1240	E1240