P-20372-5

E1279

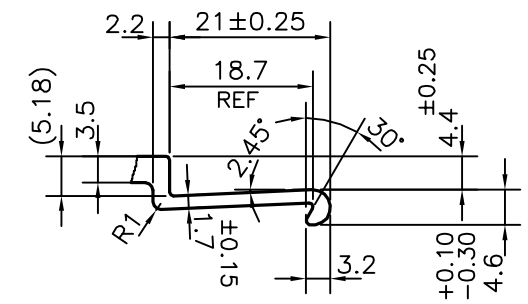

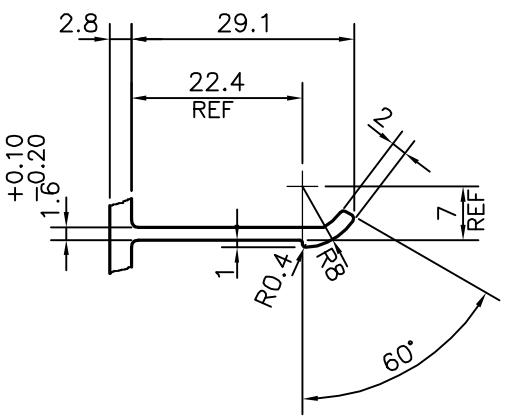

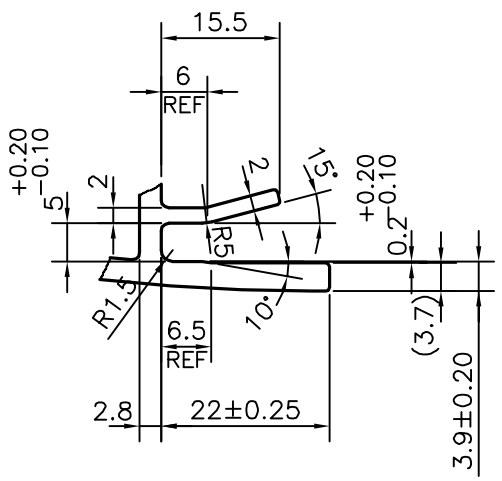

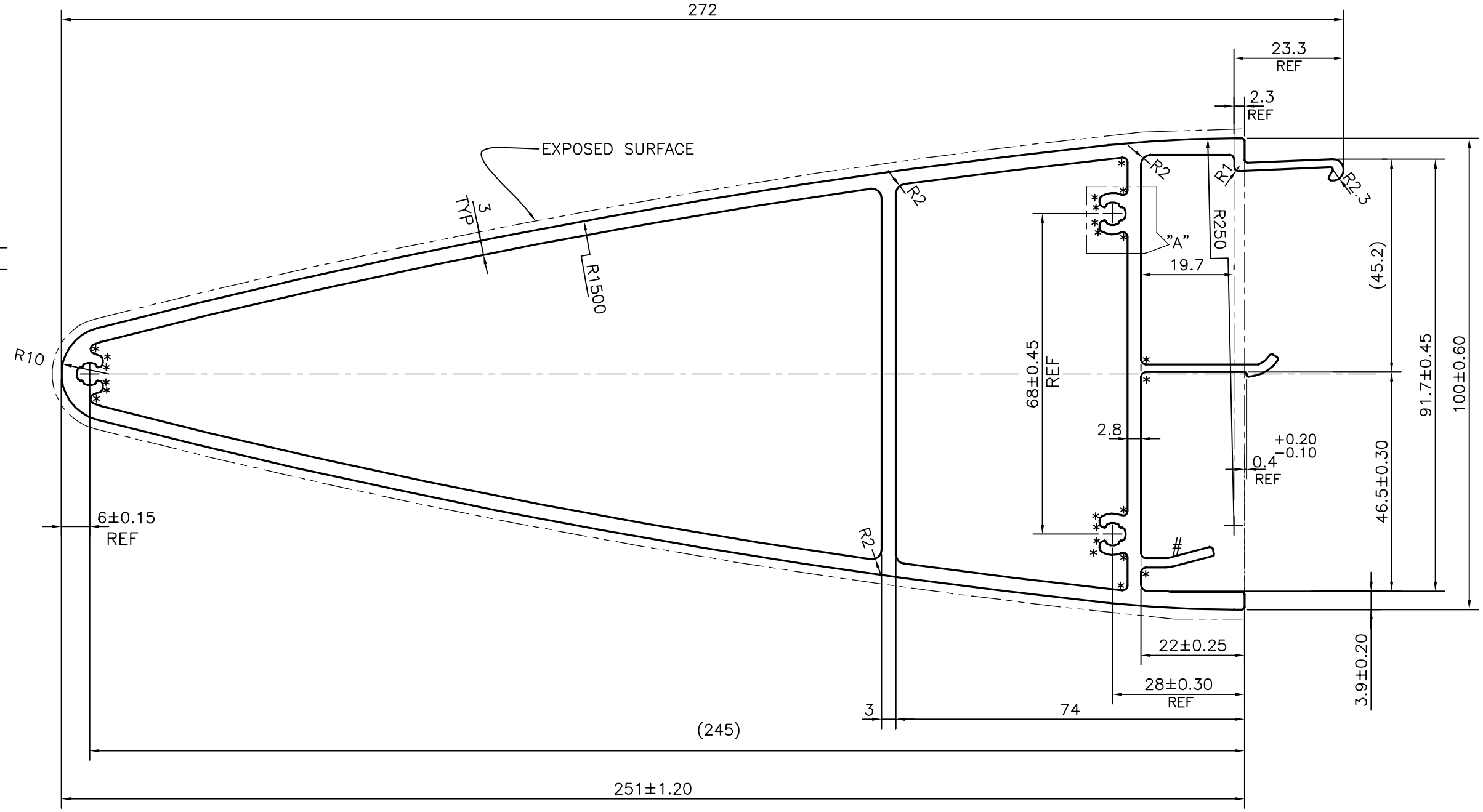

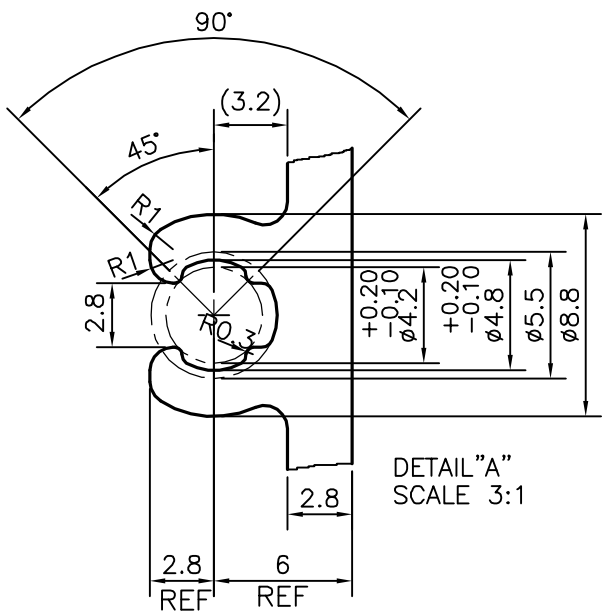

DETAIL"A"
SCALE 3:1

DIMENSION		TOLERANCES	TOLERANCES (OPEN ENDS)	
OVER	UP TO AND INCLUDING	(EXCEPT OPEN ENDS)	E≤60	60<E≤120[a]
–	10	±0.15	±0.15	–
10	15	±0.20	±0.20	–
15	30	±0.25	±0.25	–
30	45	±0.30	±0.30	±0.45
45	60	±0.40	±0.40	±0.55
60	90	±0.45	±0.45	±0.65
90	120	±0.60	±0.60	±0.80
120	150	±0.80	±0.80	±1.0
150	180	±1.0	±1.0	±1.3
180	240	±1.2	±1.2	±1.5
240	300	±1.5	±1.5	±1.8

JINDAL

SYMBOL OF QUALITY
AN ISO 9001 COMPANY

JINDAL ALUMINIUM LTD.

BANGALORE-560073 (INDIA)

1. ALL DIMENSIONS ARE IN mm.
2. ROUND OFF ALL SHARP CORNERS WITH 0.40 mm.
3. TOLERANCES WILL BE AS PER BS:EN-12020-2 UNLESS OTHERWISE SPECIFIED

		NAME	DATE
DRAWN		J.P.KAUSHIK	16-12-2019
CHECKED			
APPROVED		B.NATARAJA	26-12-2019
SCALE			1:1
AREA mm²			2286.264
PERIMETER mm.			803.863
WEIGHT kg/m			6.173
DRAWING No.		SECTION No.	
P-20372-5		–	
E1279		E1279	

PARTY'S NAME	SCHUECO INDIA PVT. LTD., MUMBAI
PARTY'S DRAWING No.	9639478 FZ 0000
ALLOY & TEMPER	6060 T66
DESCRIPTION	BLADE SECTION

*** = 1.0 RADIUS (25 PLACES)**

1. STRAIGHTNESS=AS PER BS:EN-12020-2

2. TWIST=AS PER BS:EN-12020-2