| P–20591 |
|---|
| E1286 |
| |

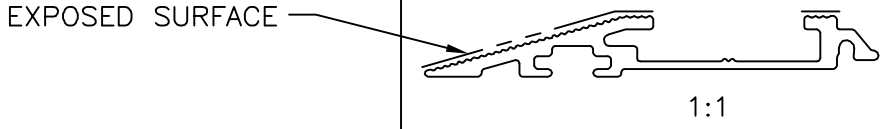


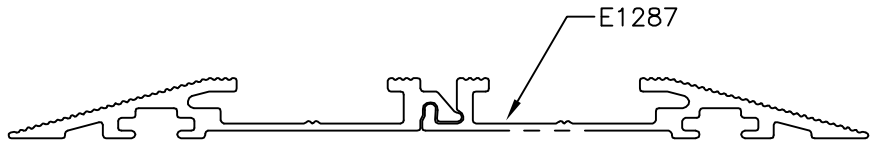


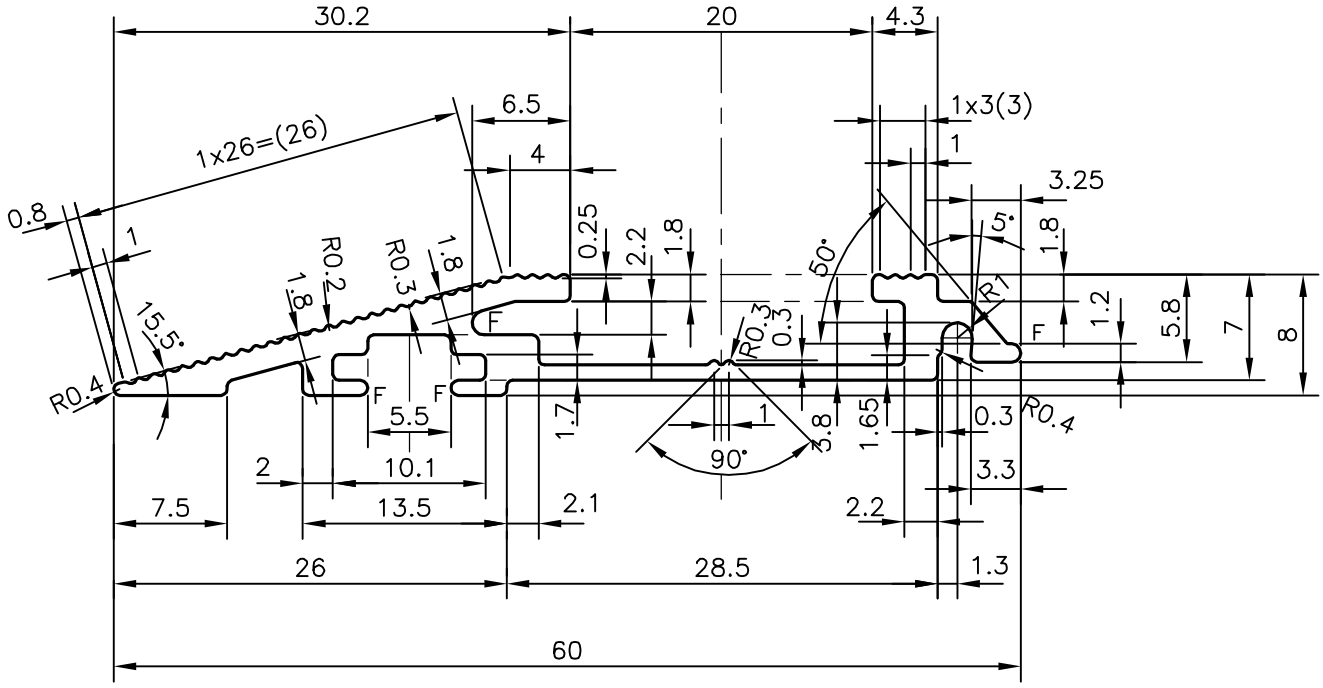


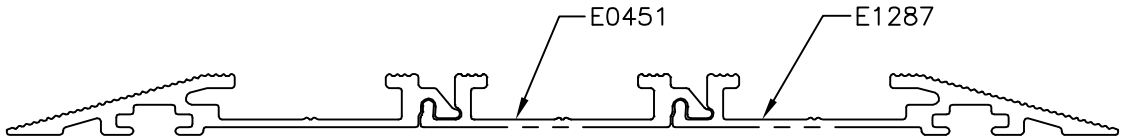


F= FULL RADIUS ( 3 PLACES)

PLEASE SPECIFY THE EXPOSED SURFACE IN THE DRAWING WHEREVER BETTER FINISH REQUIRED.

TOLERANCES ON OVERALL WIDTHS & WIDTHS ACROSS FLATS OF BARS, & REGULAR SECTIONS

| | | | |
|---|---|---|---|
| UPTO 6.40mm – ±0.20 | UPTO 32.0mm – ±0.38 | UPTO 120.0mm – ±0.85 | UPTO 320.00mm – ±1.70 |
| UPTO 10.0mm – ±0.23 | UPTO 50.0mm – ±0.46 | UPTO 160.0mm – ±1.02 | |
| UPTO 12.0mm – ±0.25 | UPTO 60.0mm – ±0.53 | UPTO 200.0mm – ±1.14 | |
| UPTO 16.0mm – ±0.28 | UPTO 80.0mm – ±0.69 | UPTO 250.0mm – ±1.40 | |
| UPTO 25.0mm – ±0.30 | UPTO 100.0mm – ±0.75 | UPTO 300.0mm – ±1.65 | |

JINDAL
SYMBOL OF QUALITY
AN ISO 9001 COMPANY

**JINDAL ALUMINIUM LTD.**
*BANGALORE–560073 (INDIA)*

| | NAME | DATE |
|---|---|---|
| DRAWN | J.P.KAUSHIK | 07–01–2020 |
| CHECKED | | |
| APPROVED | B.NATARAJA | 17–01–2020 |

1. ALL DIMENSIONS ARE IN mm.
2. ROUND OFF ALL SHARP CORNERS WITH 0.40 mm.
IS:3965–1981

| | |
|---|---|
| SCALE | 2:1 |
| AREA $mm^2$ | 134.615 |
| PERIMETER mm. | 179.89 |
| WEIGHT kg/m | 0.363 |

| | |
|---|---|
| PARTY'S NAME | SURFACES, BANGALORE |
| PARTY'S DRAWING No. | AS PER E0449 |
| ALLOY & TEMPER | HE9 WP |
| DESCRIPTION | MISC. SECTION |

| DRAWING No. | SECTION No. |
|---|---|
| P–20591 | – |
| E1286 | E1286 |
| | |
| | |
| | |