P–20592
E1287

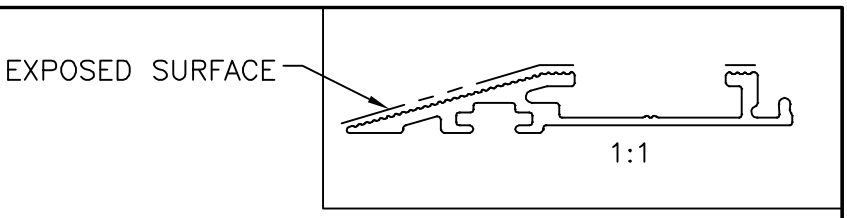

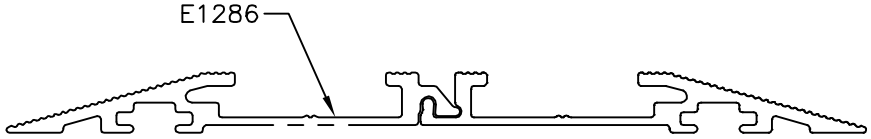

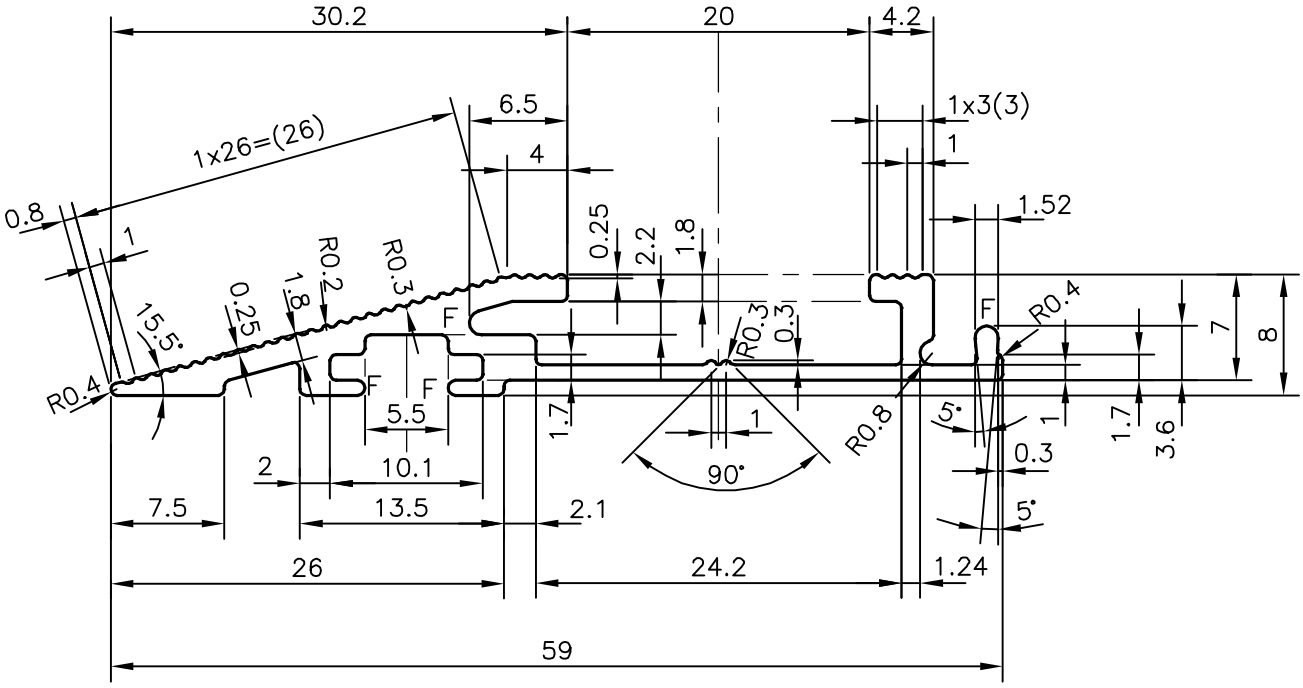

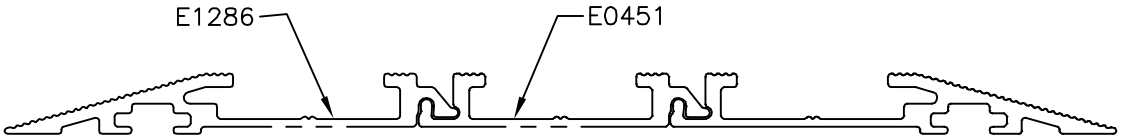

F= FULL RADIUS (4 PLACES)

PLEASE SPECIFY THE EXPOSED SURFACE IN THE DRAWING WHEREVER BETTER FINISH REQUIRED.

TOLERANCES ON OVERALL WIDTHS & WIDTHS ACROSS FLATS OF BARS, & REGULAR SECTIONS

UPTO 6.40mm – ±0.20	UPTO 32.0mm – ±0.38	UPTO 120.0mm – ±0.85	UPTO 320.00mm – ±1.70
UPTO 10.0mm – ±0.23	UPTO 50.0mm – ±0.46	UPTO 160.0mm – ±1.02	
UPTO 12.0mm – ±0.25	UPTO 60.0mm – ±0.53	UPTO 200.0mm – ±1.14	
UPTO 16.0mm – ±0.28	UPTO 80.0mm – ±0.69	UPTO 250.0mm – ±1.40	
UPTO 25.0mm – ±0.30	UPTO 100.0mm – ±0.75	UPTO 300.0mm – ±1.65	

JINDAL
SYMBOL OF QUALITY
AN ISO 9001 COMPANY

JINDAL ALUMINIUM LTD.
BANGALORE–560073 (INDIA)

	NAME	DATE
DRAWN	J.P.KAUSHIK	07–01–2020
CHECKED		
APPROVED	B.NATARAJA	17–01–2020

1. ALL DIMENSIONS ARE IN mm.
2. ROUND OFF ALL SHARP CORNERS WITH 0.40 mm.
IS:3965–1981

SCALE	2:1
AREA mm^2	129.93
PERIMETER mm.	181.293
WEIGHT kg/m	0.351

PARTY'S NAME	SURFACES, BANGALORE
PARTY'S DRAWING No.	AS PER E0450
ALLOY & TEMPER	HE9 WP
DESCRIPTION	MISC. SECTION

DRAWING No.	SECTION No.
P–20592	–
E1287	E1287