P–20858
E1315

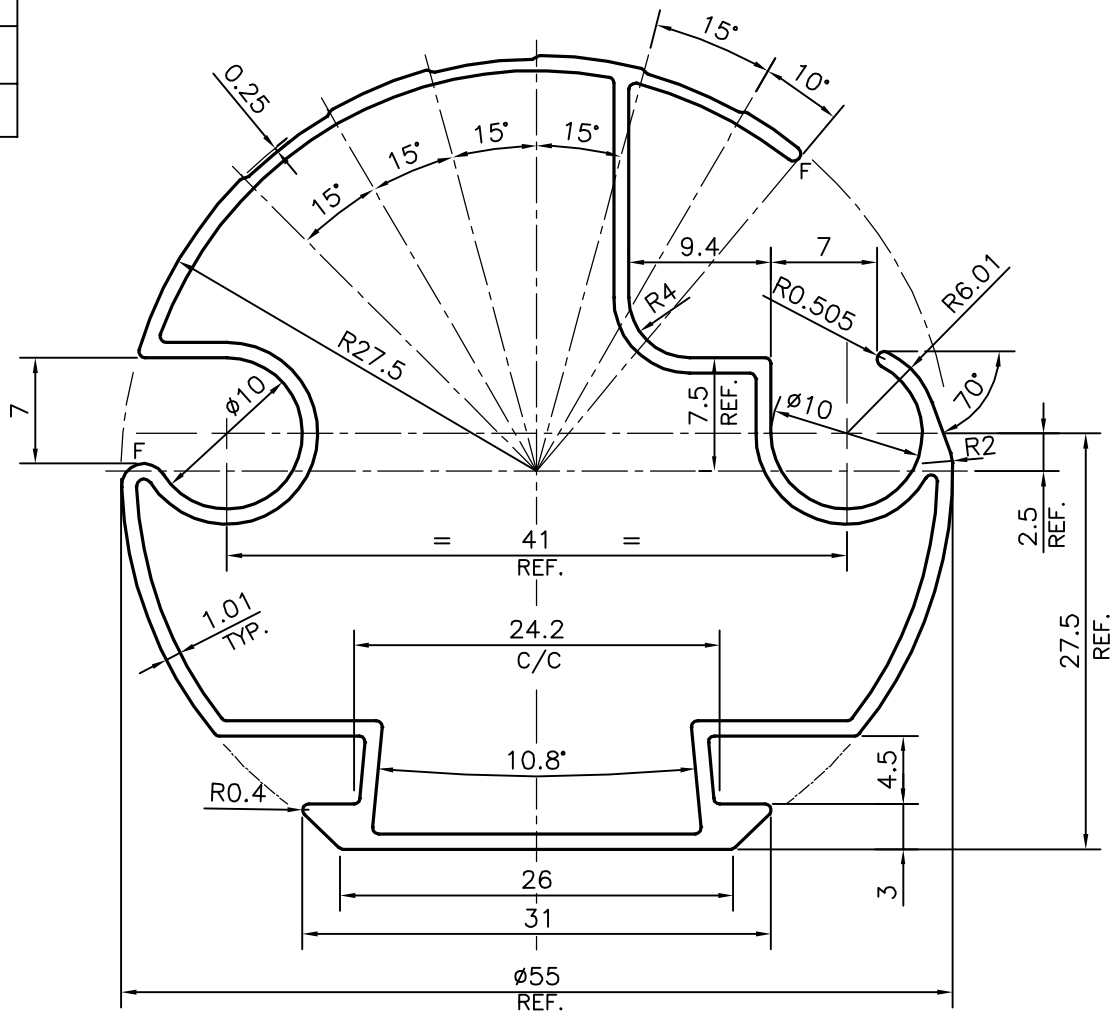

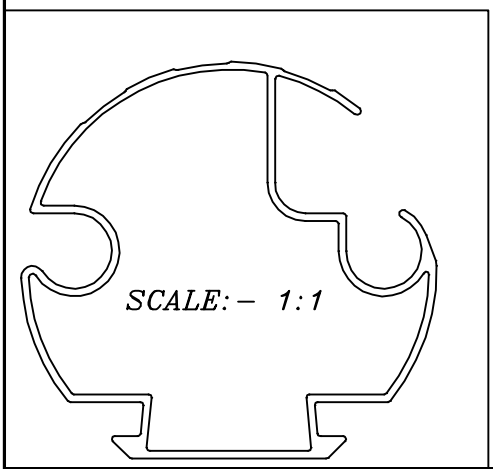

3.076 kg/15' (AVERAGE)

F = FUL RADIUS (2 PLACES)

JINDAL SYMBOL OF QUALITY AN ISO 9001 COMPANY	*JINDAL ALUMINIUM LTD.* *BANGALORE–560073 (INDIA)*		NAME / DATE
		DRAWN	J.P.KAUSHIK / 04–03–2020
		CHECKED	
		APPROVED	B.NATARAJA / 21–03–2020

1. ALL DIMENSIONS ARE IN mm.
2. ROUND OFF ALL SHARP CORNERS WITH 0.40 mm.
3. TOLERANCES WILL BE AS PER IS:6477–1983 , UNLESS OTHERWISE SPECIFIED

SCALE	2:1
AREA mm^2	248.148
PERIMETER mm.	267.007
WEIGHT kg/m	0.670

PARTY'S NAME	ADARSH ALUMINIUM WORKS, DELHI
PARTY'S DRAWING No.	LIGHTER OF SECTION No.–22077
ALLOY & TEMPER	6063 T6
DESCRIPTION	VENETIAN BLIND SECTION

DRAWING No.	SECTION No.
P–20858	–
E1315	E1315