P-21209
E1358

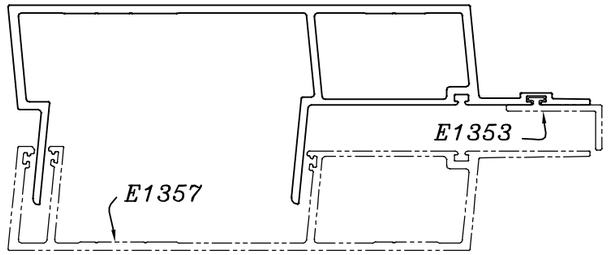

SCALE:- 0.5:1

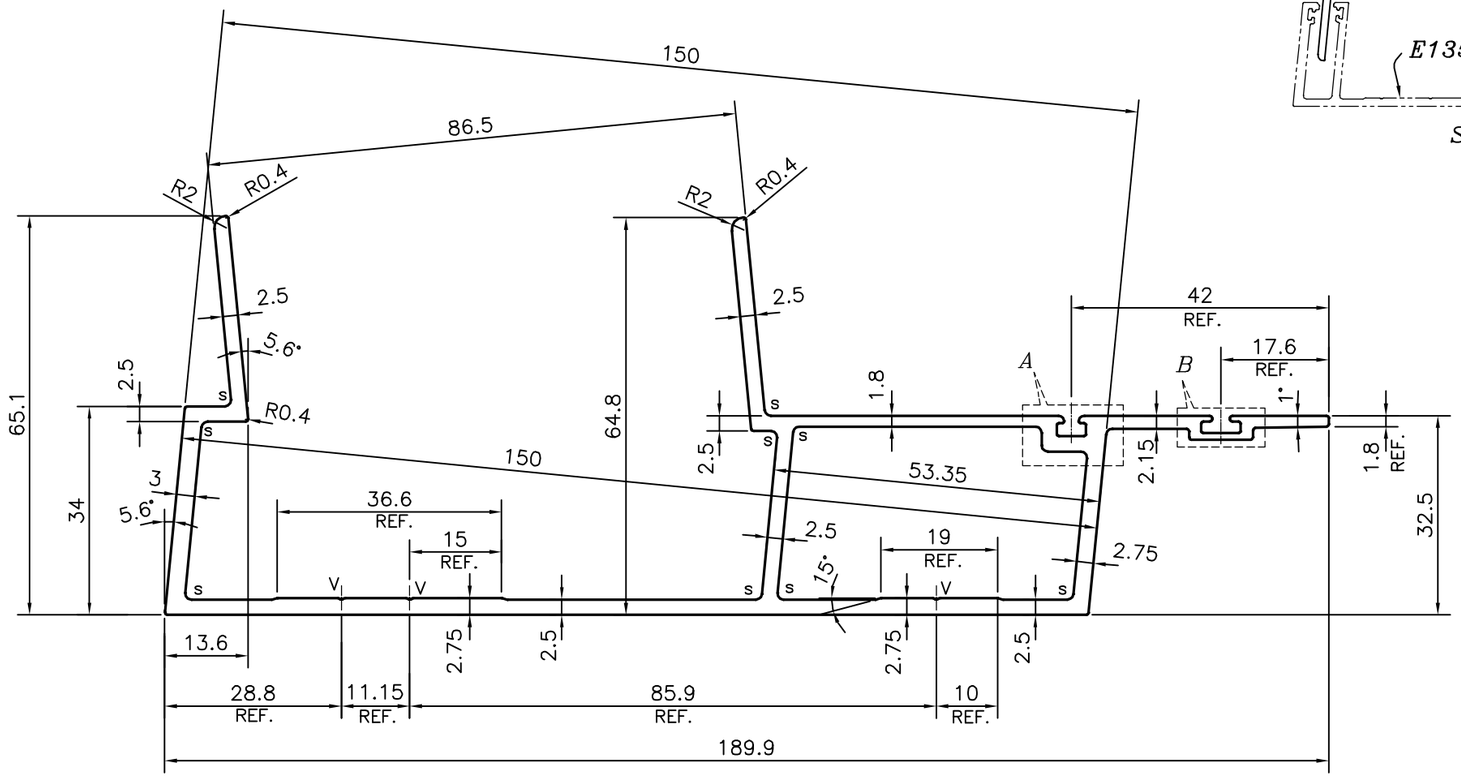

V = VEE GROOVE 0.3x90° (3 PLACES)
X = RADIUS 0.3 mm. (10 PLACES)
S = RADIUS 1.0 mm. (14 PLACES)

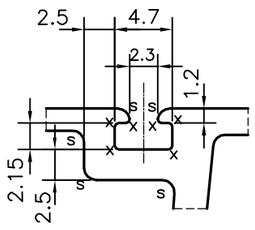

DETAIL OF "A"
SCALE 2:1

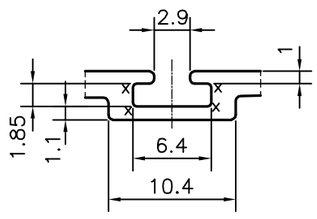

DETAIL OF "B"
SCALE 2:1

TOLERANCES ON OVERALL WIDTHS & WIDTHS ACROSS FLATS OF BARS, & REGULAR SECTIONS

UPTO 6.40mm – ±0.20	UPTO 32.0mm – ±0.38	UPTO 120.0mm – ±0.85
UPTO 10.0mm – ±0.23	UPTO 50.0mm – ±0.46	UPTO 160.0mm – ±1.02
UPTO 12.0mm – ±0.25	UPTO 60.0mm – ±0.53	UPTO 200.0mm – ±1.14
UPTO 16.0mm – ±0.28	UPTO 80.0mm – ±0.69	UPTO 250.0mm – ±1.40
UPTO 25.0mm – ±0.30	UPTO 100.0mm – ±0.75	UPTO 300.0mm – ±1.65

1. STRAIGHTNESS=1.0mm/M
2. TWIST=1.0mm/M
3. ANGULARITY= ±1°
4. FLATNESS =0.007xWIDTH

JINDAL
SYMBOL OF QUALITY
AN ISO 9001 COMPANY

JINDAL ALUMINIUM LTD.
BANGALORE-560073 (INDIA)

1. ALL DIMENSIONS ARE IN mm.
2. ROUND OFF ALL SHARP CORNERS WITH 0.4 mm.
3. TOLERANCES WILL BE AS PER IS:6477-1983 , UNLESS OTHERWISE SPECIFIED

	NAME	DATE
DRAWN	PARVESH	24-07-2020
CHECKED		
APPROVED	B.NATARAJA	11-08-2020
SCALE		1:1
AREA mm^2		1016.312
PERIMETER mm.		671.519
WEIGHT kg/m		2.744

PARTY'S NAME	ALUFIT (INDIA) PRIVATE LIMITED, BANGALORE
PARTY'S DRAWING No.	AS PER AUTOCAD DRAWING-AL-21
ALLOY & TEMPER	6063 T6
DESCRIPTION	CURTAIN WALL SECTION-MALE MULLION

DRAWING No.	SECTION No.
P-21209	–
E1358	E1358