P–21366	
E1366	

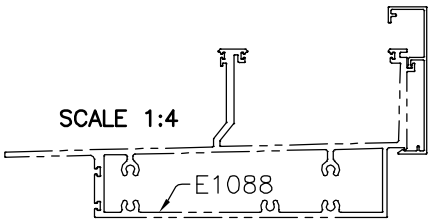

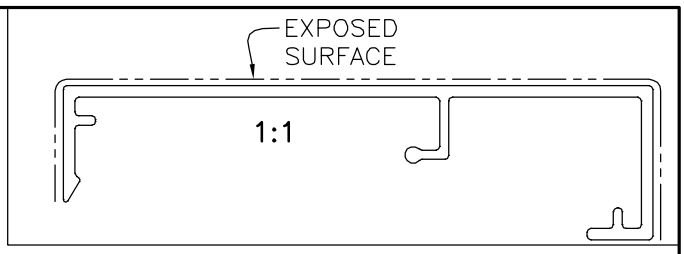

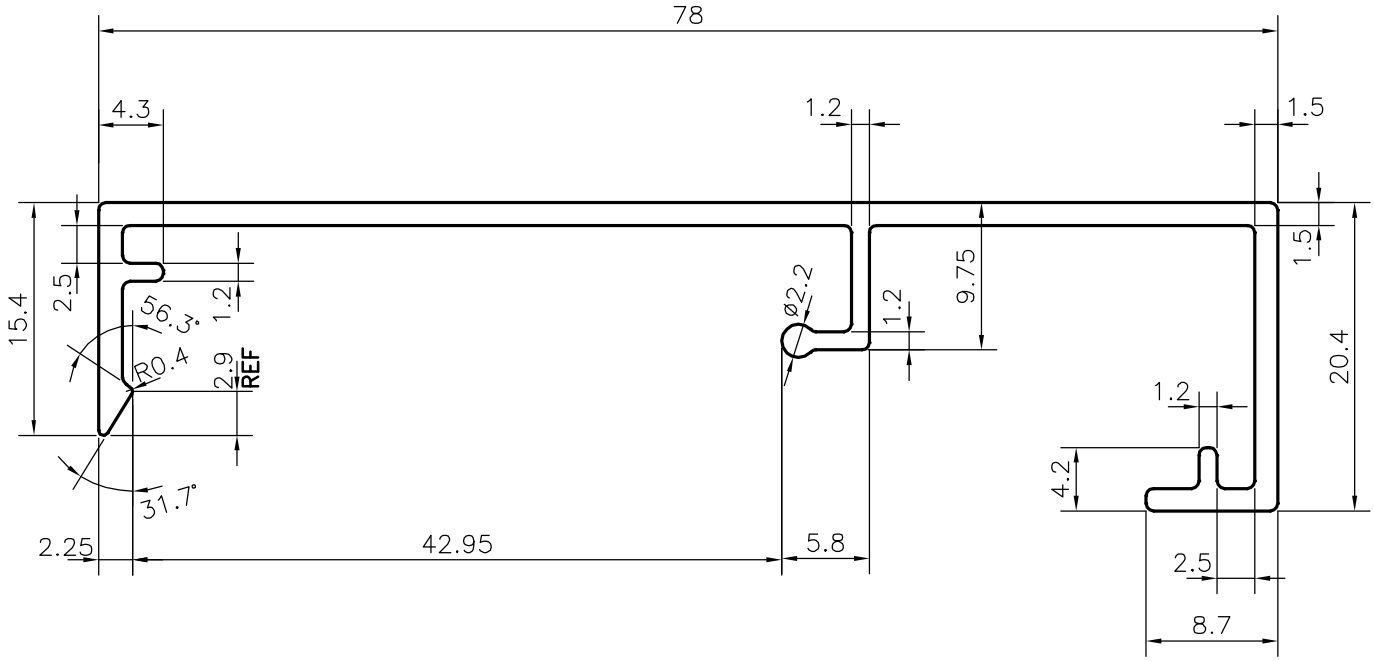

TOLERANCES ON OVERALL WIDTHS & WIDTHS ACROSS FLATS OF BARS, & REGULAR SECTIONS

UPTO 6.40mm – ±0.20	UPTO 32.0mm – ±0.38	UPTO 120.0mm – ±0.85
UPTO 10.0mm – ±0.23	UPTO 50.0mm – ±0.46	UPTO 160.0mm – ±1.02
UPTO 12.0mm – ±0.25	UPTO 60.0mm – ±0.53	UPTO 200.0mm – ±1.14
UPTO 16.0mm – ±0.28	UPTO 80.0mm – ±0.69	UPTO 250.0mm – ±1.40
UPTO 25.0mm – ±0.30	UPTO 100.0mm – ±0.75	UPTO 300.0mm – ±1.65

1. **STRAIGHTNESS=1.0mm/M**
2. **TWIST=1.0mm/M**
3. **ANGULARITY= ±1°**
4. **FLATNESS =0.007xWIDTH**

JINDAL

SYMBOL OF QUALITY
AN ISO 9001 COMPANY

JINDAL ALUMINIUM LTD.

BANGALORE–560073 (INDIA)

	NAME	DATE
DRAWN	J.P.KAUSHIK	26–08–2020
CHECKED		
APPROVED	J.N.RAI	01–09–2020

1. ALL DIMENSIONS ARE IN mm.
2. ROUND OFF ALL SHARP CORNERS WITH 0.40 mm.
3. TOLERANCES WILL BE AS PER **IS:3965–1981** , UNLESS OTHERWISE SPECIFIED

SCALE	2:1
AREA mm^2	201.274
PERIMETER mm.	271.043
WEIGHT kg/m	0.543

PARTY'S NAME	ALUFIT (INDIA) PRIVATE LIMITED, BANGALORE
PARTY'S DRAWING No.	4SR–DIE–30
ALLOY & TEMPER	6063 T6
DESCRIPTION	SKIRTING PROFILE

DRAWING No.	SECTION No.
P–21366	–
E1366	E1366