P-21354-2

E1392

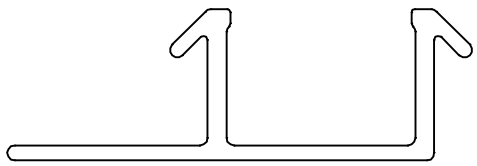

SCALE:- 1:1

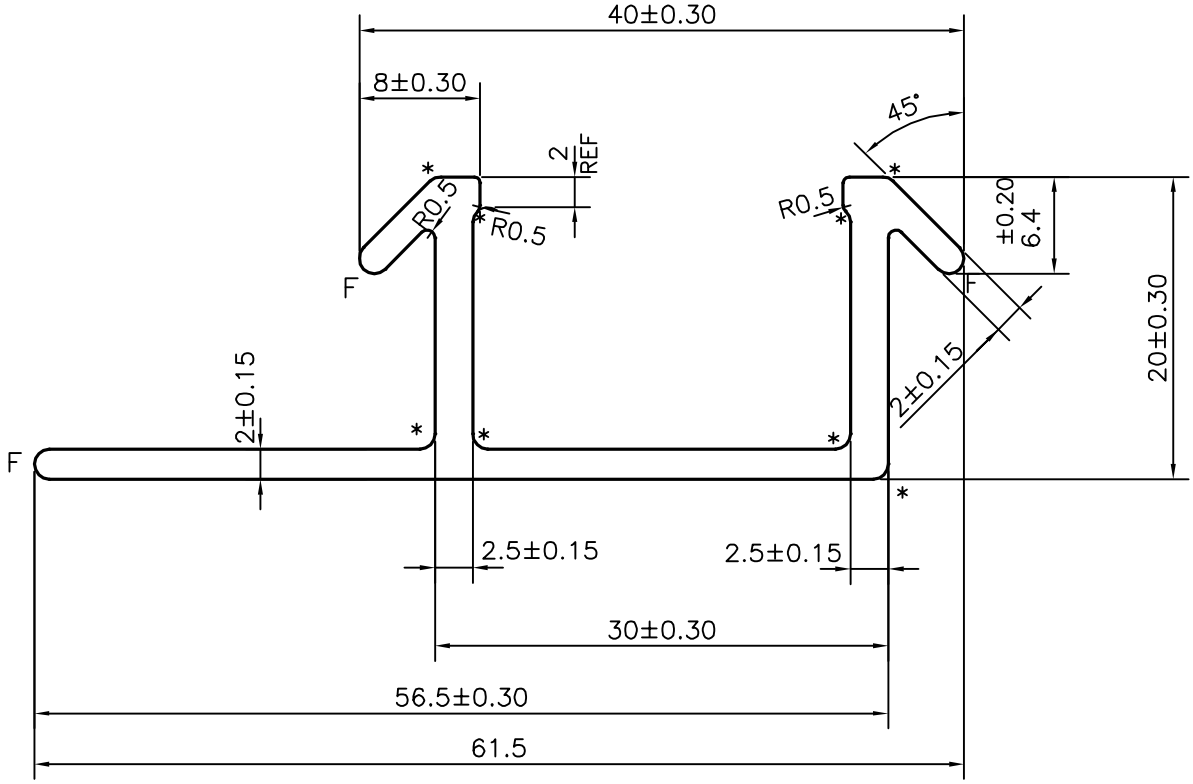

SCALE:- 2:1

* = 1.0 RADIUS (8 PLACES)

F = FULL RADIUS (3 PLACES)

TOLERANCES ON OVERALL WIDTHS & WIDTHS ACROSS FLATS OF BARS, & REGULAR SECTIONS

UPTO 6.40mm – ±0.20	UPTO 32.0mm – ±0.38	UPTO 120.0mm – ±0.85	1. STRAIGHTNESS=1.7mm/M
UPTO 10.0mm – ±0.23	UPTO 50.0mm – ±0.46	UPTO 160.0mm – ±1.02	2. TWIST=1.7mm/M
UPTO 12.0mm – ±0.25	UPTO 60.0mm – ±0.53	UPTO 200.0mm – ±1.14	3. ANGULARITY= ±2°
UPTO 16.0mm – ±0.28	UPTO 80.0mm – ±0.69	UPTO 250.0mm – ±1.40	4. FLATNESS =0.007xWIDTH
UPTO 25.0mm – ±0.30	UPTO 100.0mm – ±0.75	UPTO 300.0mm – ±1.65	

JINDAL

SYMBOL OF QUALITY
AN ISO 9001 COMPANY

JINDAL ALUMINIUM LTD.

BANGALORE-560073 (INDIA)

	NAME	DATE
DRAWN	J.P.KAUSHIK	26-09-2020
CHECKED		
APPROVED	B.NATARAJA	03-10-2020

1. ALL DIMENSIONS ARE IN mm.
2. ROUND OFF ALL SHARP CORNERS WITH 0.40 mm.
3. TOLERANCES WILL BE AS PER IS:3965-1981 , UNLESS OTHERWISE SPECIFIED

SCALE	2:1
AREA mm^2	231.644
PERIMETER mm.	208.081
WEIGHT kg/m	0.625

PARTY'S NAME	SWIKRITI RENEWABLES PVT. LTD., MUMBAI
PARTY'S DRAWING No.	401020 REV. 02
ALLOY & TEMPER	6063 T6
DESCRIPTION	RAIL PORTRAIT SECTION

DRAWING No.	SECTION No.
P-21354-2	–
E1392	E1392