P−21628−1
E1419

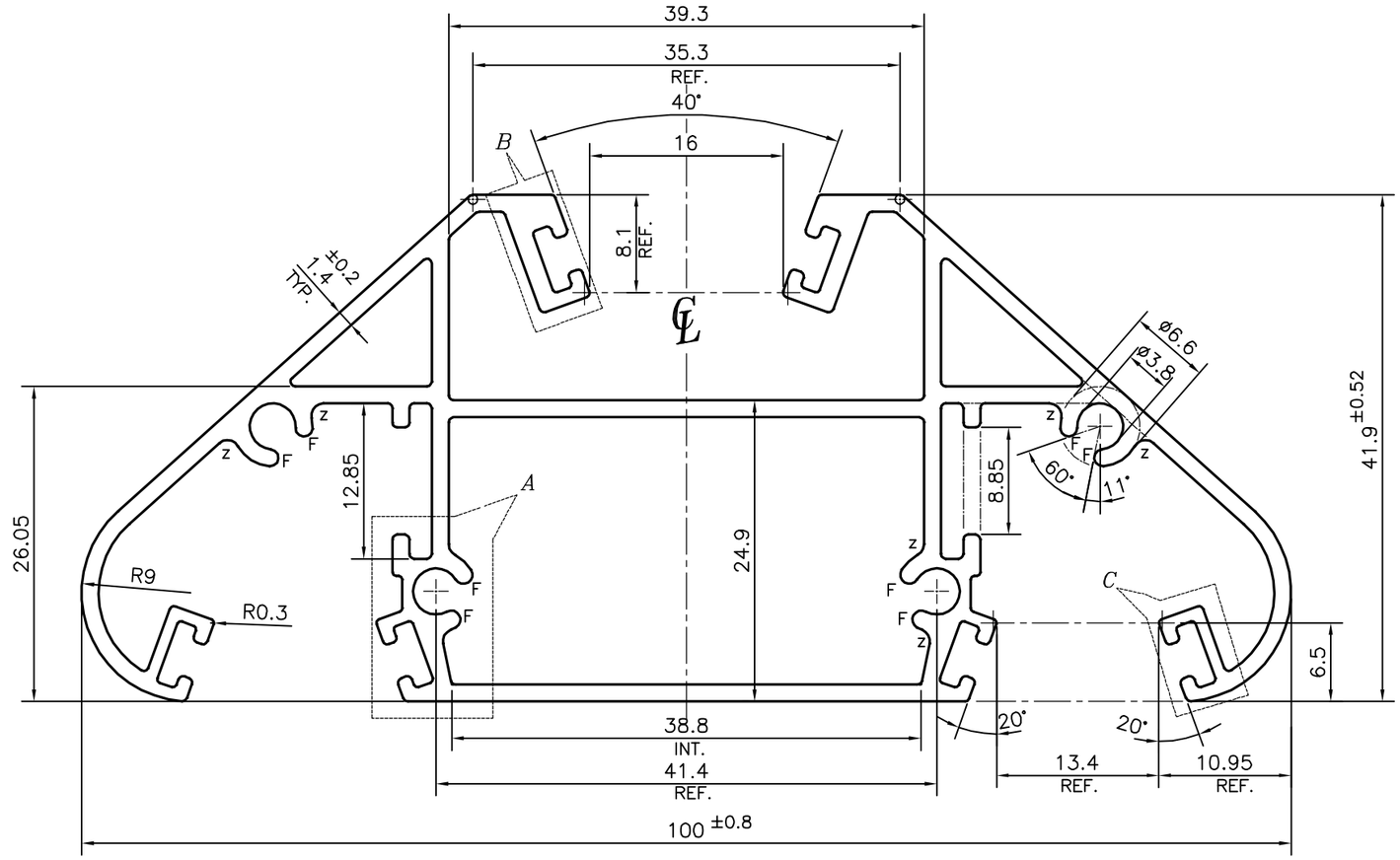

F = FULL RADIUS (8 PLACES)
Z = RADIUS 1 mm. (8 PLACES)
X = RADIUS 0.3 (34 PLACES)

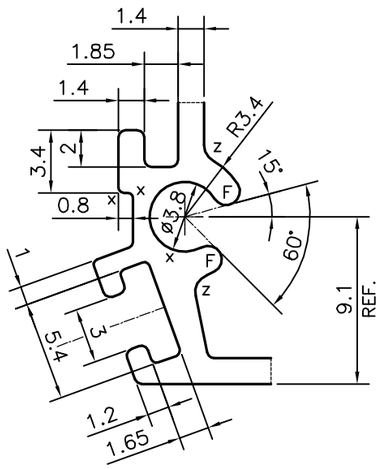

DETAIL OF "A"
SCALE 3:1

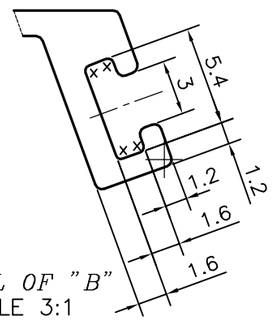

DETAIL OF "B"
SCALE 3:1

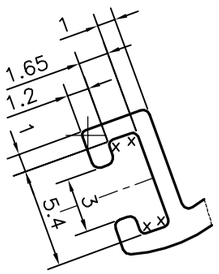

DETAIL OF "C"
SCALE 3:1

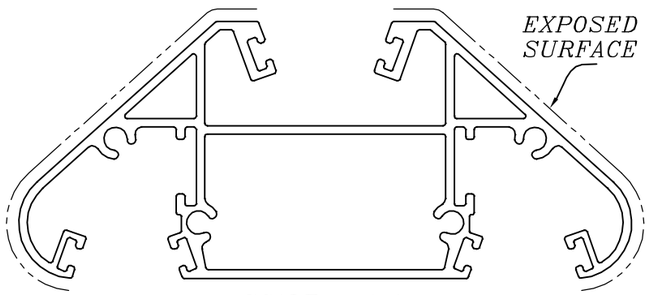

SCALE:− 1:1

APPROXIMATE WEIGHT RANGE:−1.384 kg/M TO 1.743 kg/M

TOLERANCES ON OVERALL WIDTHS & WIDTHS ACROSS FLATS OF BARS, & REGULAR SECTIONS			
UPTO 6.40mm − ±0.20	UPTO 32.0mm − ±0.38	UPTO 120.0mm − ±0.85	1. STRAIGHTNESS=1.7mm/M
UPTO 10.0mm − ±0.23	UPTO 50.0mm − ±0.46	UPTO 160.0mm − ±1.02	2. TWIST=1.7mm/M
UPTO 12.0mm − ±0.25	UPTO 60.0mm − ±0.53	UPTO 200.0mm − ±1.14	3. ANGULARITY= ±2°
UPTO 16.0mm − ±0.28	UPTO 80.0mm − ±0.69	UPTO 250.0mm − ±1.40	4. FLATNESS =0.007xWIDTH
UPTO 25.0mm − ±0.30	UPTO 100.0mm − ±0.75	UPTO 300.0mm − ±1.65	

JINDAL
SYMBOL OF QUALITY
AN ISO 9001 COMPANY

JINDAL ALUMINIUM LTD.
BANGALORE−560073 (INDIA)

1. ALL DIMENSIONS ARE IN mm.
2. ROUND OFF ALL SHARP CORNERS WITH 0.40 mm.
3. TOLERANCES WILL BE AS PER IS:6477−1983 , UNLESS OTHERWISE SPECIFIED

	NAME	DATE
DRAWN	PARVESH	17−10−2020
CHECKED		
APPROVED	B.NATARAJA	30−10−2020
SCALE		2:1
AREA mm²		579.385
PERIMETER mm.		571.984
WEIGHT kg/m		1.564

PARTY'S NAME	SURFACES, BANGALORE
PARTY'S DRAWING No.	AS PER PROPOSAL DRAWING
ALLOY & TEMPER	6063 T6
DESCRIPTION	ARCHITECTURAL SECTION

DRAWING No.	SECTION No.
P−21628−1	−
E1419	E1419