P–21777–1
E1432

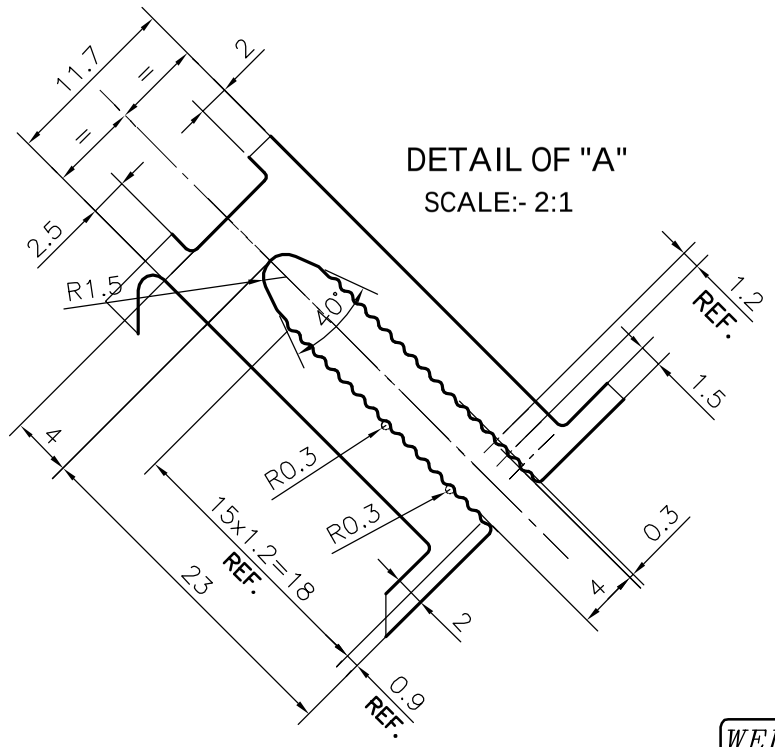

DETAIL OF "A"
SCALE:- 2:1

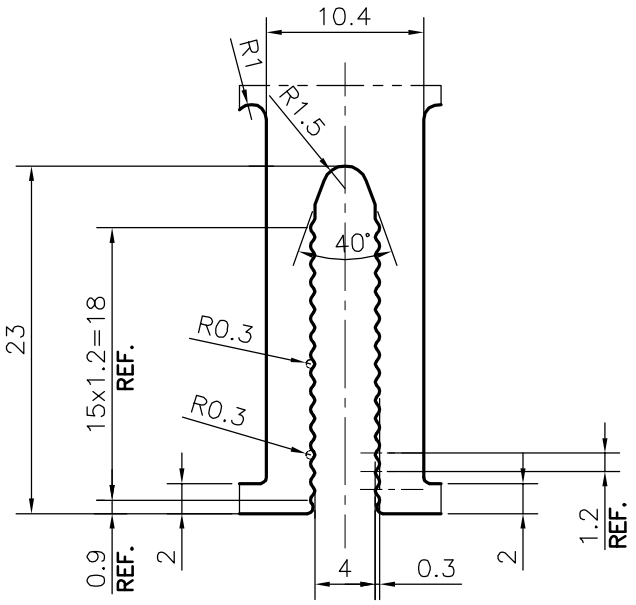

DETAIL OF "B"
SCALE:- 2:1

*WEIGHT RANGE (kg/m)– **3.352 – 4.096** (APPROX.)*

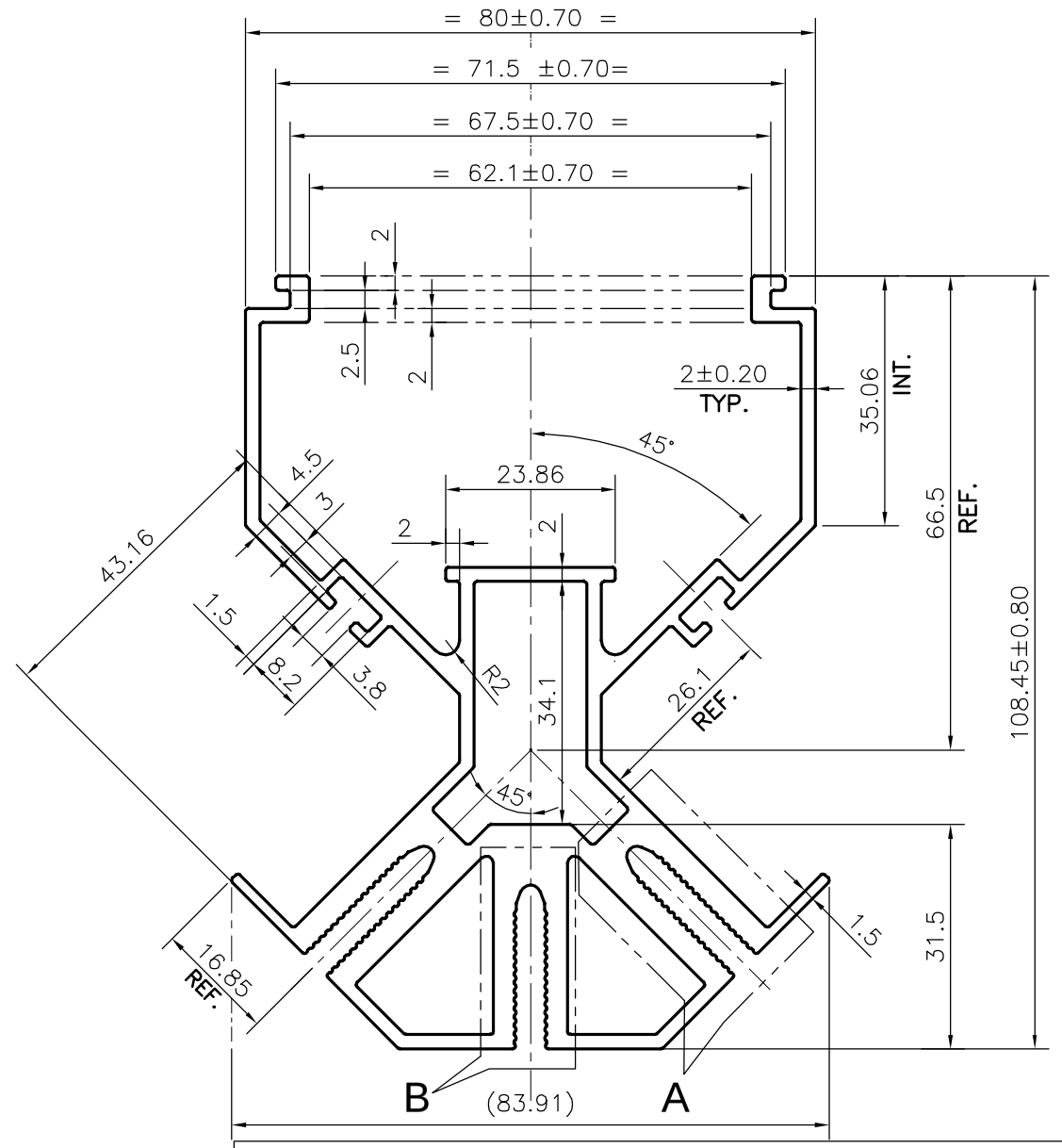

MINIMUM CLEARANCE 0.5mm/SIDE FOR EASY FITMENT

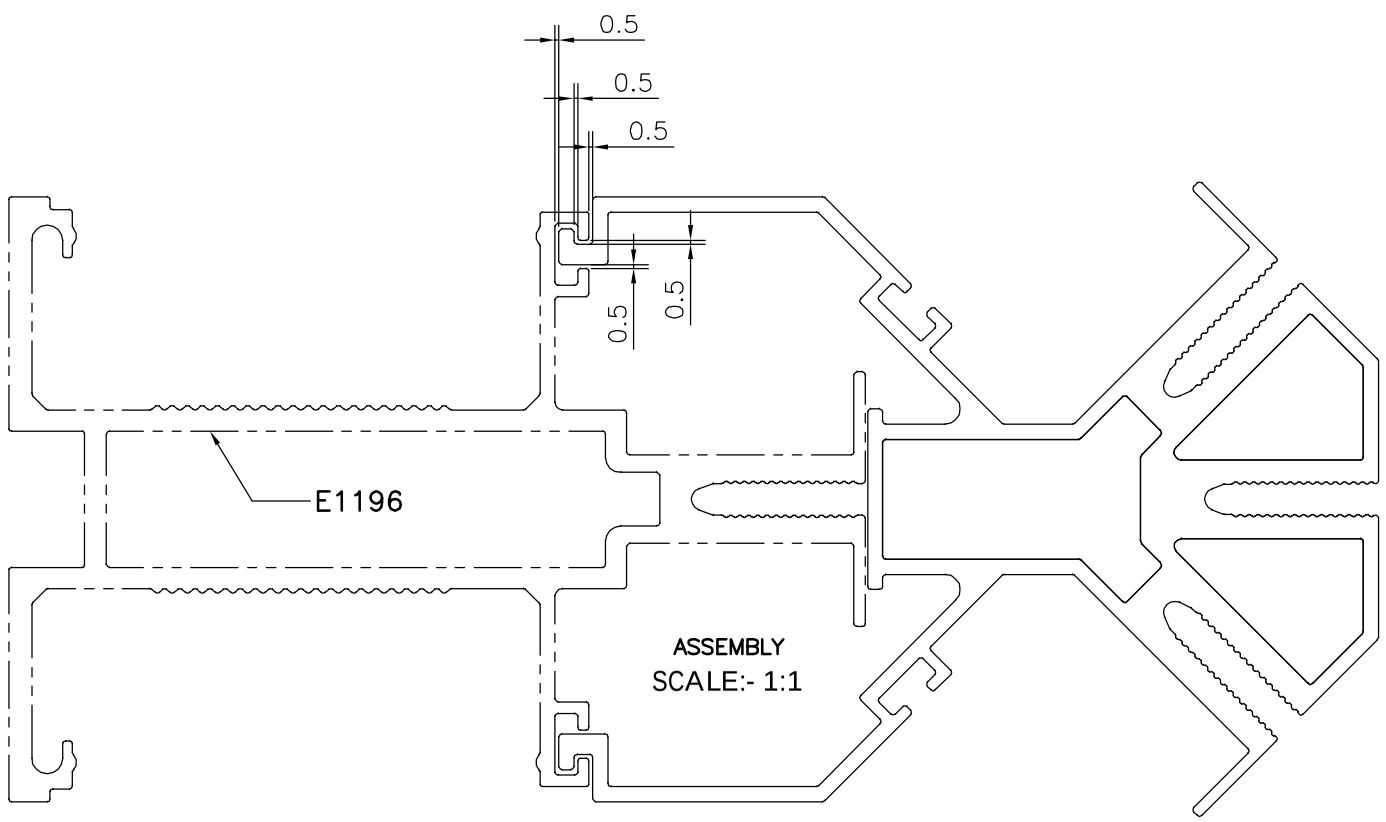

ASSEMBLY
SCALE:- 1:1

NOTE:-
ALUFIT ACCEPT UPTO 0.75 mm/M
(STRAIGHTNESS,TWIST)

1. **STRAIGHTNESS=0.5mm/M**
2. **TWIST=0.5mm/M**
3. **ANGULARITY= ±1°**
4. **FLATNESS =0.007xWIDTH**

PLEASE CONFIRM ALL THE DIMENSIONS AND MATCH WITH YOUR MATCHING COMPONENT
PLEASE SPECIFY THE EXPOSED SURFACE IN THE DRAWING WHEREVER BETTER FINISH REQUIRED.

DIMENSION		TOLERANCES	TOLERANCES (OPEN ENDS)	
OVER	UP TO AND INCLUDING	(EXCEPT OPEN ENDS)	E≤60	60<E≤120
–	10	±0.15	±0.15	–
10	15	±0.20	±0.20	–
15	30	±0.25	±0.25	–
30	45	±0.30	±0.30	±0.45
45	60	±0.40	±0.40	±0.55
60	90	±0.45	±0.45	±0.65
90	120	±0.60	±0.60	±0.80
120	150	±0.80	±0.80	±1.0
150	180	±1.0	±1.0	±1.3
180	240	±1.2	±1.2	±1.5
240	300	±1.5	±1.5	±1.8

JINDAL
SYMBOL OF QUALITY
AN ISO 9001 COMPANY

JINDAL ALUMINIUM LTD.
BANGALORE–560073 (INDIA)

1. ALL DIMENSIONS ARE IN mm.
2. ROUND OFF ALL SHARP CORNERS WITH 0.40 mm.
3. TOLERANCES WILL BE AS PER **IS:6477–1983** , UNLESS OTHERWISE SPECIFIED

		NAME	DATE
DRAWN		DARPAN	24–11–2020
CHECKED			
APPROVED		B.NATARAJA	03–12–2020
SCALE			1:1
AREA mm^2			1380.702
PERIMETER mm.			777.534
WEIGHT kg/m			3.728

PARTY'S NAME	ALUFIT (INDIA) PRIVATE LIMITED, BANGALORE
PARTY'S DRAWING No.	AS PER AUTOCAD DRAWING
ALLOY & TEMPER	6063 T6
DESCRIPTION	CORNER SHUTTER SECTION

DRAWING No.	SECTION No.
P–21777–1	–
E1432	E1432