P-22732-3

E1646

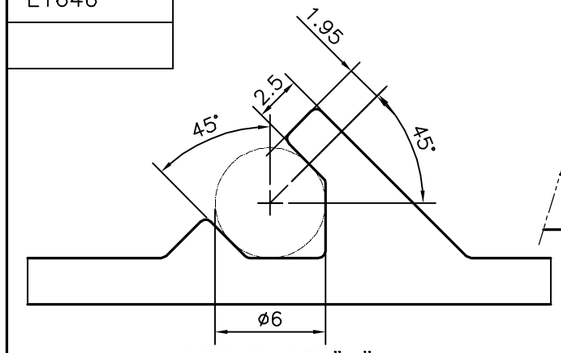

DETAIL OF "A"
SCALE 3:1

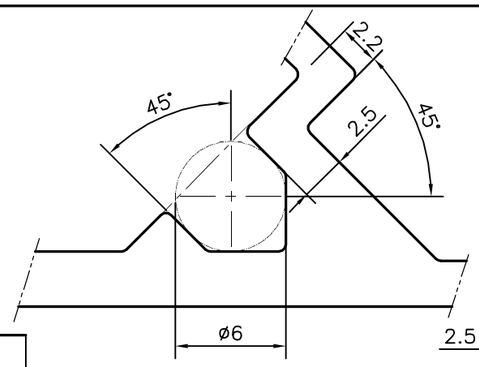

DETAIL OF "F"
SCALE 3:1

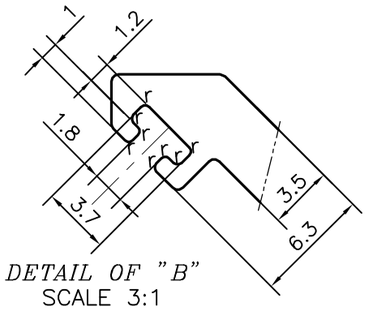

DETAIL OF "B"
SCALE 3:1

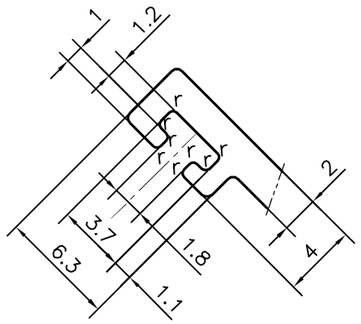

DETAIL OF "D"
SCALE 3:1

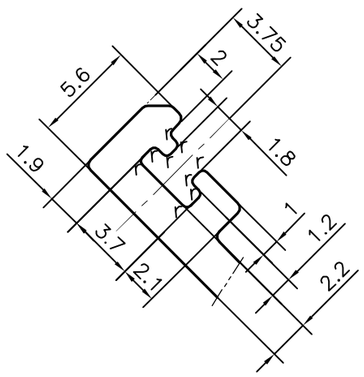

DETAIL OF "C"
SCALE 3:1

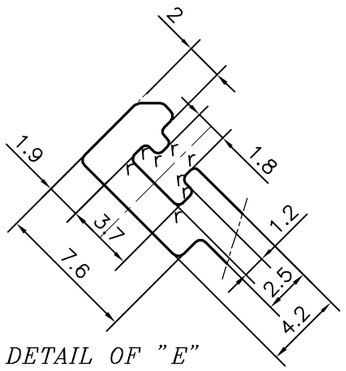

DETAIL OF "E"
SCALE 3:1

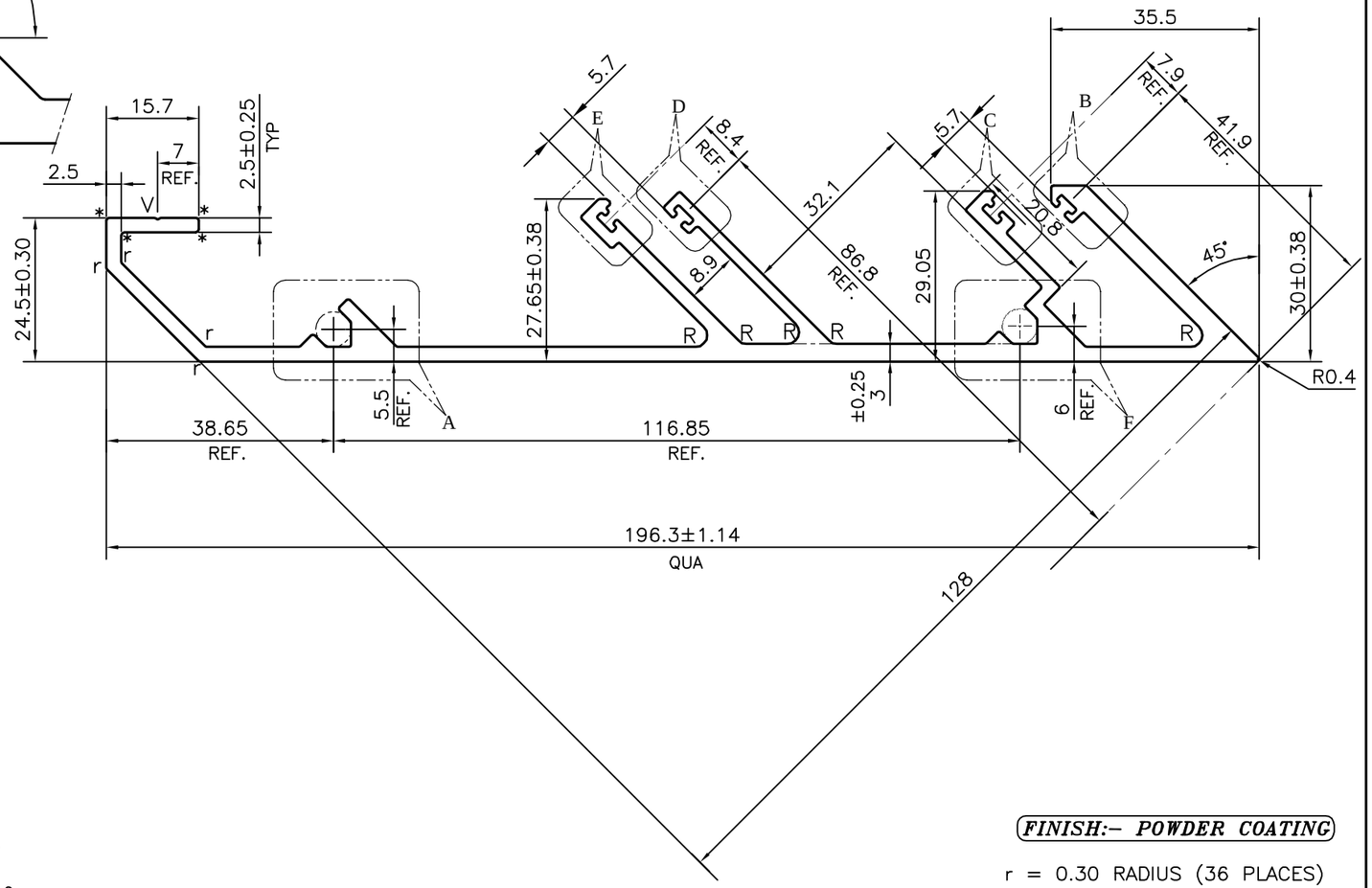

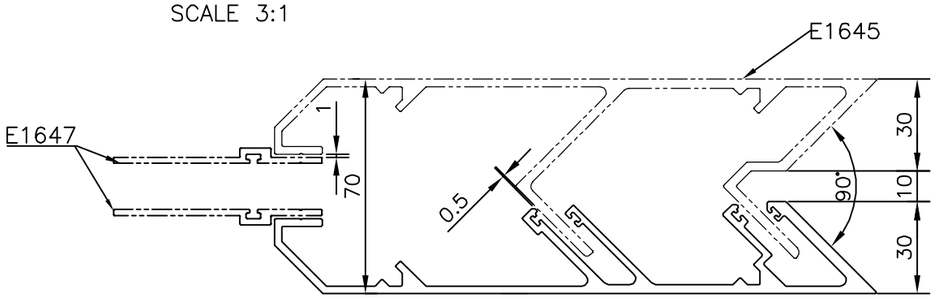

ASSEMBLY
SCALE:-1:2

FINISH:- POWDER COATING

r = 0.30 RADIUS (36 PLACES)
* = 0.50 RADIUS (4 PLACES)
R = 2.0 RADIUS (5 PLACES)
V = V GROOVE 0.3x90° (1 PLACE)

APPROXIMATE WEIGHT RANGE – 2.578 – 3.150 kg/m

TOLERANCES ON OVERALL WIDTHS & WIDTHS ACROSS FLATS OF BARS, & REGULAR SECTIONS

UPTO 6.40mm – ±0.20	UPTO 32.0mm – ±0.38	UPTO 120.0mm – ±0.85
UPTO 10.0mm – ±0.23	UPTO 50.0mm – ±0.46	UPTO 160.0mm – ±1.02
UPTO 12.0mm – ±0.25	UPTO 60.0mm – ±0.53	UPTO 200.0mm – ±1.14
UPTO 16.0mm – ±0.28	UPTO 80.0mm – ±0.69	UPTO 250.0mm – ±1.40
UPTO 25.0mm – ±0.30	UPTO 100.0mm – ±0.75	UPTO 300.0mm – ±1.65

1. STRAIGHTNESS=0.75mm/M
2. TWIST=0.75mm/M
3. ANGULARITY= ±0.8°
4. FLATNESS =0.006xWIDTH

JINDAL
SYMBOL OF QUALITY
AN ISO 9001 COMPANY

JINDAL ALUMINIUM LTD.
BANGALORE-560073 (INDIA)

1. ALL DIMENSIONS ARE IN mm.
2. ROUND OFF ALL SHARP CORNERS WITH 0.40 mm.
3. TOLERANCES WILL BE AS PER IS:3965-1981 UNLESS OTHERWISE SPECIFIED

	NAME	DATE
DRAWN	SONU	22-09-2021
CHECKED		
APPROVED	B.NATARAJA	01-10-2021

SCALE	1:1
AREA mm^2	1060.471
PERIMETER mm.	770.727
WEIGHT kg/m	2.863

DRAWING No.	SECTION No.
P-22732-3	–
E1646	E1646

PARTY'S NAME	ALUFIT (INDIA) PVT. LTD., BANGALORE
PARTY'S DRAWING No.	HP-DIE-18 & REQUIREMENT
ALLOY & TEMPER	6063 T6
DESCRIPTION	CURTAIN WALL – FEMALE MULAN SECTION