P–25363
G100973

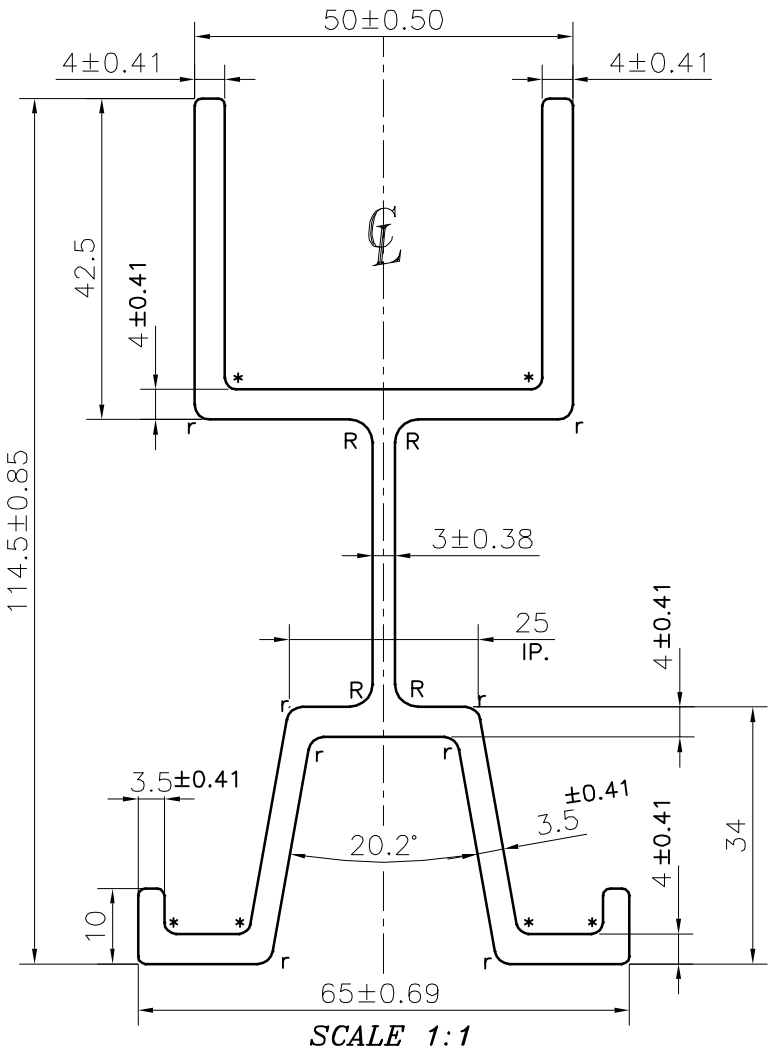

SCALE 1:1

FINISH:– ANODIZING

R = RADIUS 3mm (4 PLACES)
r = RADIUS 2mm (8 PLACES)
* = RADIUS 1.5mm (6 PLACES)
UNSPECIFIED CORNER RDAIUS 1mm

1. STRAIGHTNESS= 1.7mm/M
2. TWIST= 1.7mm/M
3. ANGULARITY= ±2°
4. FLATNESS= 0.007xWIDTH

CONTROLLED COPY

			NAME	DATE
JINDAL SYMBOL OF QUALITY AN ISO 9001 COMPANY	*JINDAL ALUMINIUM LTD.* *BANGALORE–560073 (INDIA)*	DRAWN	ADITYA N	11–05–2023
		CHECKED		
		APPROVED	B.NATARAJA	24–05–2023
1. ALL DIMENSIONS ARE IN mm. 2. ROUND OFF ALL SHARP CORNERS WITH 0.40 mm. 3. TOLERANCES WILL BE AS PER IS:3965–1981 , UNLESS OTHERWISE SPECIFIED		SCALE		1:1
		AREA mm^2		1099.858
		PERIMETER mm.		576.568
		WEIGHT kg/m		2.970
PARTY'S NAME	VIJAY ENGINEERING WORKS, JALANDHAR.	DRAWING No.		SECTION No.
PARTY'S DRAWING No.	AS PER DRAWING	P–25363		7000001121
ALLOY & TEMPER	6063 T66 — PRODUCT CODE:–085 HSN CODE:– 76042990	G100973		G100973
DESCRIPTION	INDUSTRIAL SECTION			