P-JAL-B-278
G101239

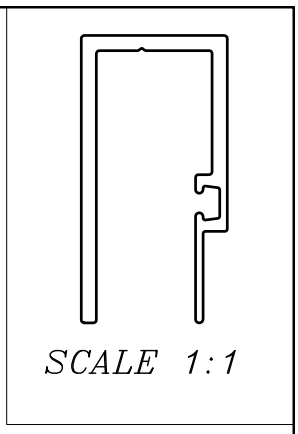

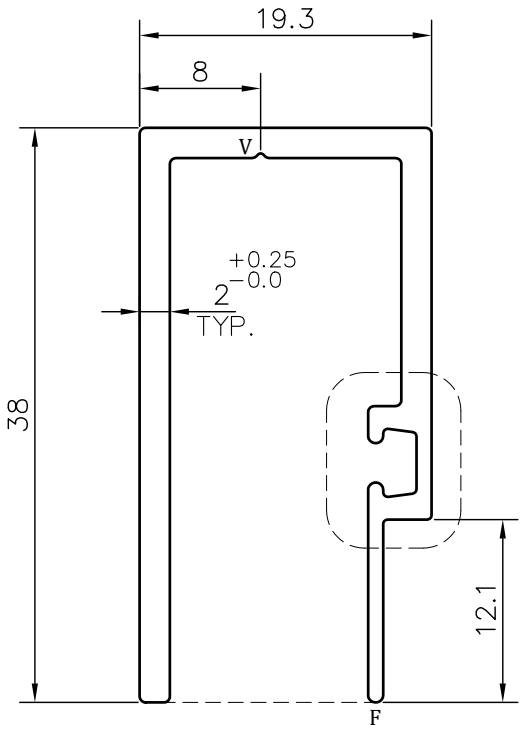

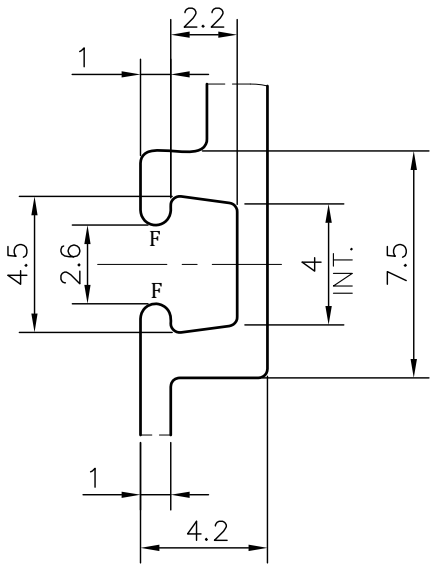

DETAIL A
SCALE 4:1

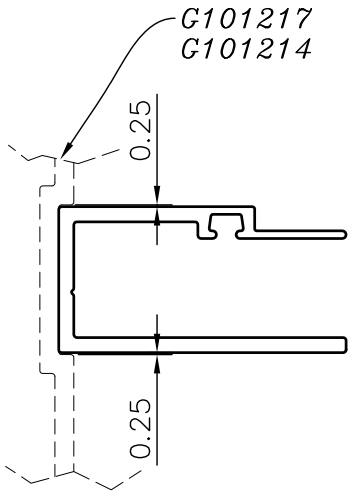

MATCHING
SCALE 1:1

ISSUE-2 (01-09-2023)

* Tolerance added on thickness 2.0mm $^{+0.25}_{-0.0}$ as per customer Requirement

NOTE:-
F= FULL RADIUS (3 PLACES)
V= 0.3x90° V-GROOVE (1 PLACE)

1. STRAIGHTNESS= 1.7mm/M
2. TWIST= 1.7mm/M
3. ANGULARITY= ±2°
4. FLATNESS= 0.007xWIDTH

(Q00764)

JINDAL
SYMBOL OF QUALITY
AN ISO 9001 COMPANY

JINDAL ALUMINIUM LTD.

BHIWADI-301019 (INDIA)

	NAME	DATE
DRAWN	ASHUTOSH	01-09-2023
CHECKED	PARVESH	05-09-2023
APPROVED	J.N RAI	05-09-2023

1. ALL DIMENSIONS ARE IN mm.
2. ROUND OFF ALL SHARP CORNERS WITH 0.40 mm.
3. TOLERANCES WILL BE AS PER BS:EN-755-9 , UNLESS OTHERWISE SPECIFIED

SCALE	2:1
AREA mm^2	174.51
PERIMETER mm.	197.57
WEIGHT kg/m	0.471

PARTY'S NAME	K.S.V INFRABUILD, GREATER NOIDA
PARTY'S DRAWING No.	AS PER DRAWING-INTERMEDIATE MULLION & TRANSOM ADD - ON (POPULUS TOWER)
ALLOY & TEMPER	6063 T6 — PRODUCT CODE:-055 — HSN CODE:-76042990
DESCRIPTION	CURTAIN WALL SECTION

DRAWING No.	SECTION No.
P-JAL-B-278	7000001381
G101239-ISSUE-2	G101239