P-JAL-B-144
G101329

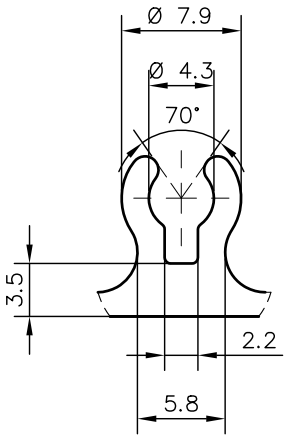

DETAIL A
SCALE 2:1

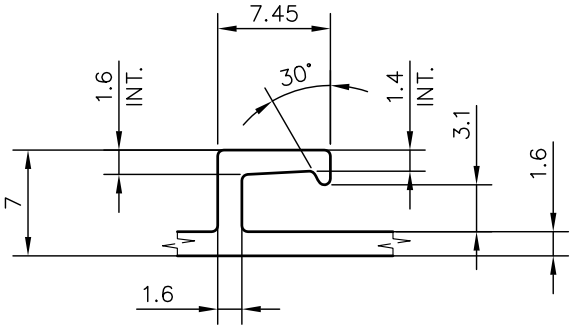

DETAIL B
SCALE 2:1

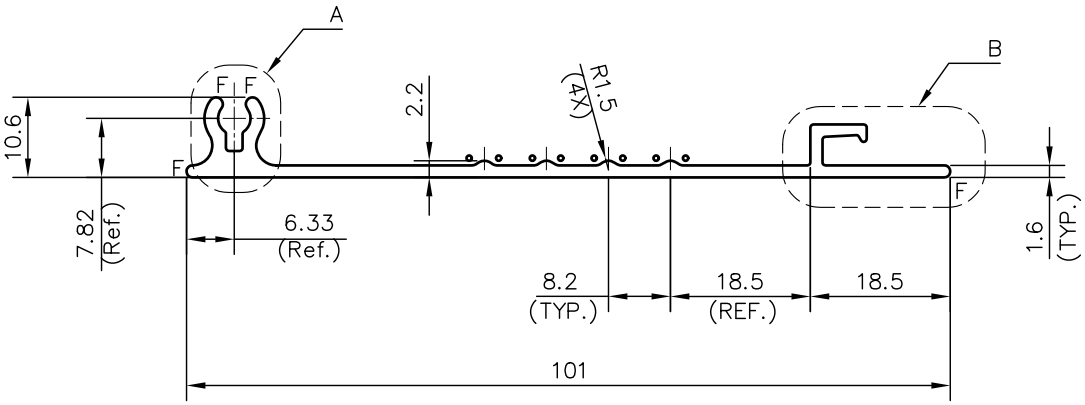

NOTE:-

F= FULL RADIUS

o = 1.00R

JINDAL SYMBOL OF QUALITY AN ISO 9001 COMPANY	*JINDAL ALUMINIUM LTD.* *BHIWADI-301019 (INDIA)*			
			NAME	DATE
		DRAWN	*AMIT*	23-01-2023
		CHECKED	*PARVESH*	08-09-2023
		APPROVED	*J.N. RAI*	08-09-2023
1. ALL DIMENSIONS ARE IN mm. 2. ROUND OFF ALL SHARP CORNERS WITH 0.40 mm. 3. TOLERANCES WILL BE AS PER BS:EN-755-9 , UNLESS OTHERWISE SPECIFIED		SCALE		1:1&2:1
		AREA mm^2		224.09
		PERIMETER mm.		257.45
		WEIGHT kg/m		0.605
PARTY'S NAME	M/s. UNITED CONCEPTS & SOLUTIONS PVT. LTD.	DRAWING No.		SECTION No.
PARTY'S DRAWING No.	AS PER SAMPLE (Q00357)	P-JAL-B-144		7000001473
ALLOY & TEMPER	6063 T6 — PRODUCT CODE:-051 HSN CODE:-76042990	G101329		G101329
DESCRIPTION	FURNITURE SECTION			