P–JAL–B–301
G101469

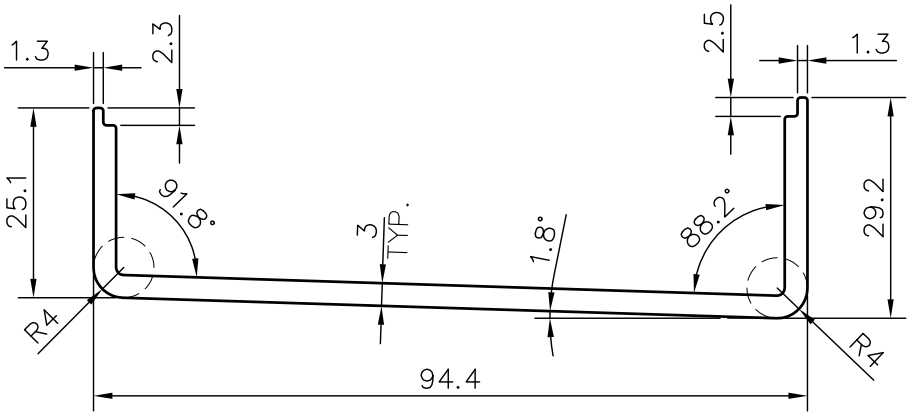

1. STRAIGHTNESS= 1.7mm/M
2. TWIST= 1.7mm/M
3. ANGULARITY= ±2°
4. FLATNESS= 0.007xWIDTH

(Q00780)

SYMBOL OF QUALITY
AN ISO 9001 COMPANY

JINDAL ALUMINIUM LTD.

BHIWADI–301019 (INDIA)

	NAME	DATE
DRAWN	*ASHUTOSH*	03–08–2023
CHECKED	*PARVESH*	11–10–2023
APPROVED	*J.N.RAI*	11–10–2023

1. ALL DIMENSIONS ARE IN mm.
2. ROUND OFF ALL SHARP CORNERS WITH 0.40 mm.
3. TOLERANCES WILL BE AS PER BS:EN–755–9 , UNLESS OTHERWISE SPECIFIED

SCALE	1:1
AREA mm^2	413.50
PERIMETER mm.	285.82
WEIGHT kg/m	1.116

PARTY'S NAME	AASTHA ALUMINA (P) LTD., GURGAON
PARTY'S DRAWING No.	AS PER DRAWING–GUTTER SLEEVE
ALLOY & TEMPER	6063 T6
DESCRIPTION	CURTAIN WALL SECTION

DRAWING No.	SECTION No.
P–JAL–B–301	7000001622
G101469	G101469