P-JAL-B-316
G101671

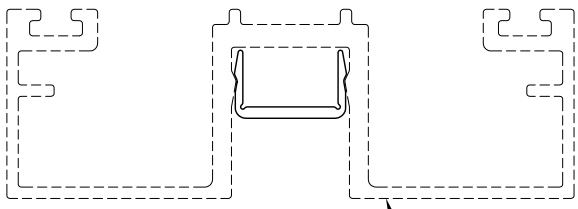

SCALE 1:1

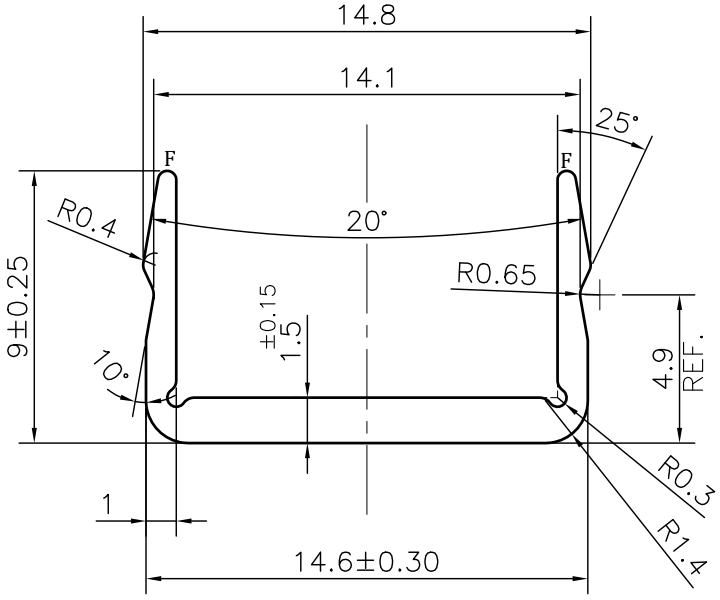

NOTE:-
R= FULL RADIUS (2 PLACES)

1. STRAIGHTNESS= 1.7mm/M
2. TWIST= 1.7mm/M
3. ANGULARITY= ±2°
4. FLATNESS= 0.007xWIDTH

Q00901

CONTROLLED COPY

SYMBOL OF QUALITY
AN ISO 9001 COMPANY

JINDAL ALUMINIUM LTD.

BHIWADI-301019 (INDIA)

	NAME	DATE
DRAWN	ASHUTOSH	30-08-2023
CHECKED	PARVESH	07-12-2023
APPROVED	R.G.PAREKH	07-12-2023

1. ALL DIMENSIONS ARE IN mm.
2. ROUND OFF ALL SHARP CORNERS WITH 0.40 mm.
3. TOLERANCES WILL BE AS PER BS:EN-755-9 , UNLESS OTHERWISE SPECIFIED

SCALE	4:1
AREA mm^2	33.928
PERIMETER mm.	61.3
WEIGHT kg/m	0.092

PARTY'S NAME	NITSON & AMITSU PVT. LTD., NEW DELHI
PARTY'S DRAWING No.	AS PER DRAWING
ALLOY & TEMPER	6063 T6 — PRODUCT CODE:-044 — HSN CODE:- 76042990
DESCRIPTION	CLIT SECTION-COVER CAP

DRAWING No.	SECTION No.
P-JAL-B-316	7000001832
G101671	G101671