P-JAL-B-372

G101730

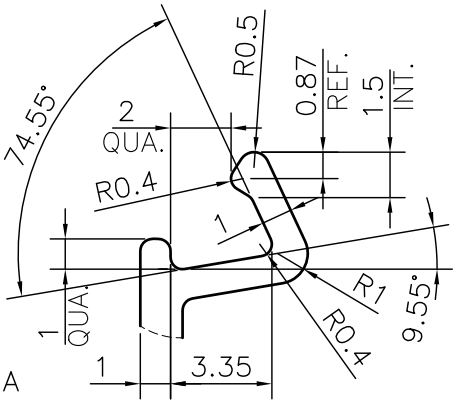

DETAIL A
SCALE 4:1

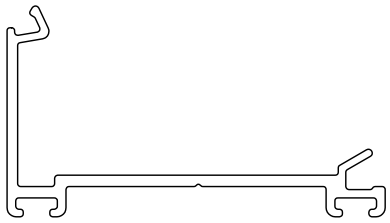

SCALE 1:1

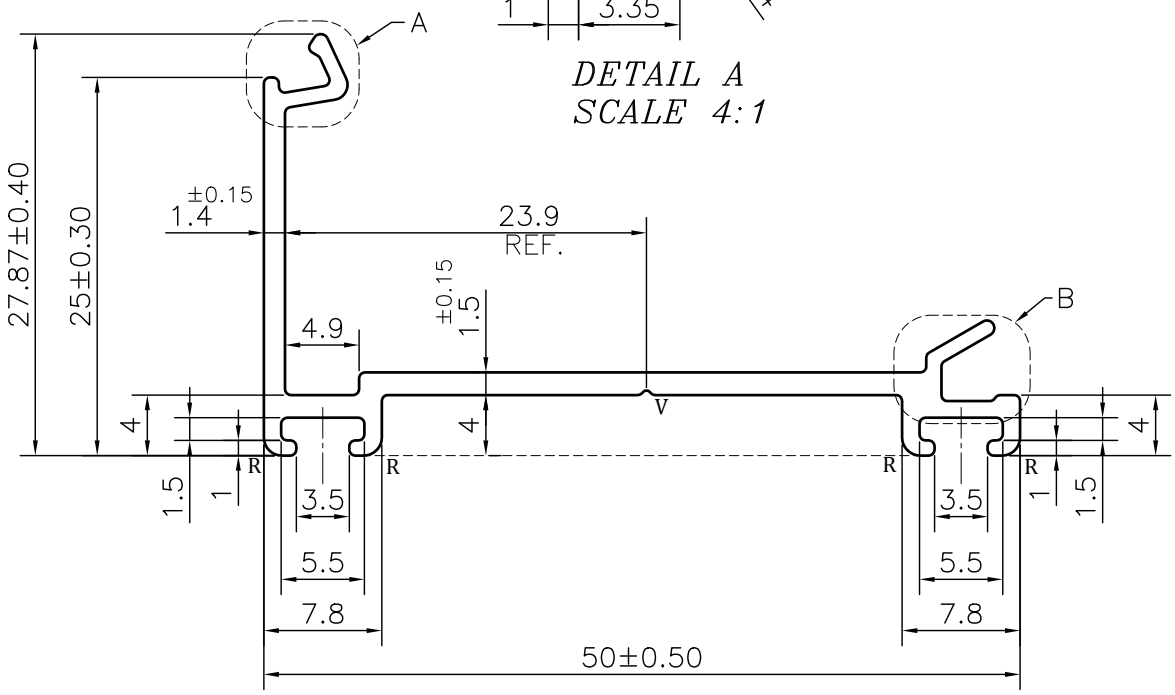

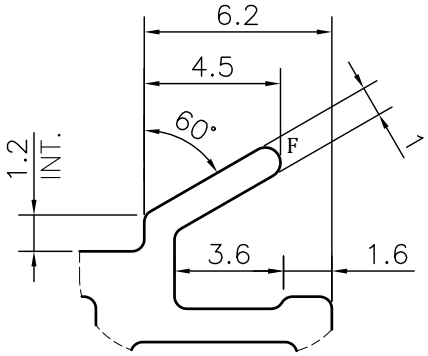

DETAIL B
SCALE 4:1

NOTE:-
R= 1.20 RADIUS (4 PLACES)
F= FULL RADIUS (1 PLACE)
V= 0.3x90° V-GROOVE (1 PLACE)

1. STRAIGHTNESS= 1.7mm/M
2. TWIST= 1.7mm/M
3. ANGULARITY= ±2°
4. FLATNESS= 0.007xWIDTH

Q01053

CONTROLLED COPY

JINDAL
SYMBOL OF QUALITY
AN ISO 9001 COMPANY

JINDAL ALUMINIUM LTD.

BHIWADI-301019 (INDIA)

	NAME	DATE
DRAWN	ASHUTOSH	10-11-2023
CHECKED	PARVESH	20-12-2023
APPROVED	J.N.RAI	20-12-2023

1. ALL DIMENSIONS ARE IN mm.
2. ROUND OFF ALL SHARP CORNERS WITH 0.40 mm.
3. TOLERANCES WILL BE AS PER BS:EN-755-9 , UNLESS OTHERWISE SPECIFIED

SCALE	2:1
AREA mm^2	136.136
PERIMETER mm.	198.06
WEIGHT kg/m	0.368

PARTY'S NAME	NITSON & AMITSU PVT. LTD., NEW DELHI
PARTY'S DRAWING No.	AS PER AUTOCAD DRAWING
ALLOY & TEMPER	6063 T6 — PRODUCT CODE:-048 — HSN CODE:- 76042990
DESCRIPTION	WINDOW SECTION-SWING PROFILE FOR SWING DOOR

DRAWING No.	SECTION No.
P-JAL-B-372	7000001893
G101730	G101730