P-JAL-B-414
G101796

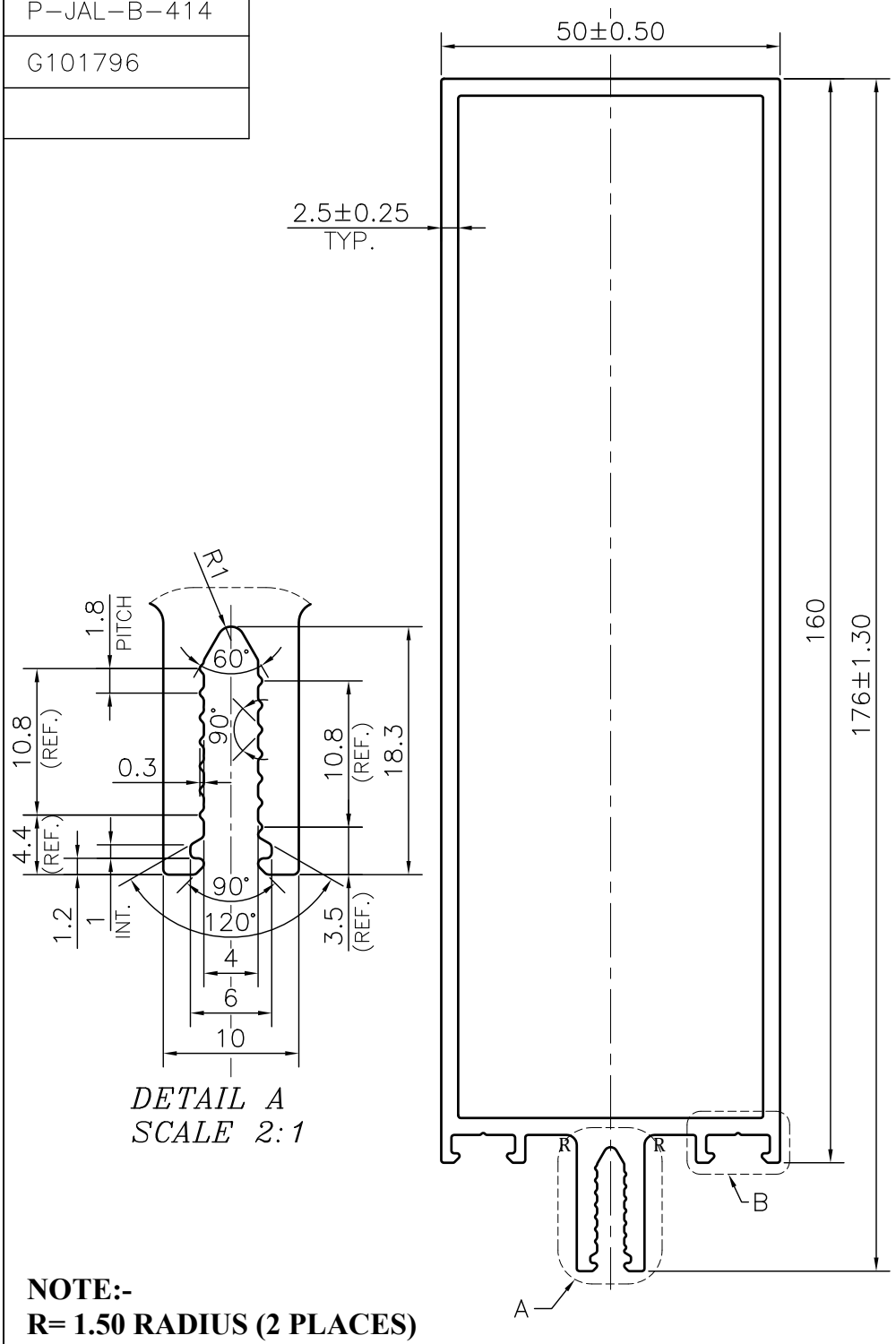

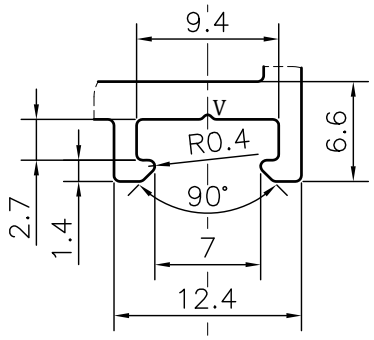

NOTE:-
R= 1.50 RADIUS (2 PLACES)
V= 0.3x90° V-GROOVE (2 PLACES)

1. STRAIGHTNESS= 1.7mm/M
2. TWIST= 1.7mm/M
3. ANGULARITY= ±2°
4. FLATNESS= 0.007xWIDTH

Q01162

CONTROLLED COPY

SYMBOL OF QUALITY
AN ISO 9001 COMPANY

JINDAL ALUMINIUM LTD.

BHIWADI-301019 (INDIA)

	NAME	DATE
DRAWN	ASHUTOSH	16-12-2023
CHECKED	PARVESH	08-01-2024
APPROVED	J.N.RAI	08-01-2024

1. ALL DIMENSIONS ARE IN mm.
2. ROUND OFF ALL SHARP CORNERS WITH 0.40 mm.
3. TOLERANCES WILL BE AS PER BS:EN-755-9 , UNLESS OTHERWISE SPECIFIED

SCALE	1:1
AREA mm^2	1161.18
PERIMETER mm.	526.047
WEIGHT kg/m	3.135

PARTY'S NAME	RG FACADE SOLUTIONS, GHAZIABAD
PARTY'S DRAWING No.	AS PER AUTOCAD DRAWING
ALLOY & TEMPER	6063 T6 — PRODUCT CODE:-055 — HSN CODE:- 76042100
DESCRIPTION	CURTAIN WALL SECTION-MULLION 160

DRAWING No.	SECTION No.
P-JAL-B-414	7000001957
G101796	G101796