P-JAL-B-570-1

G102323

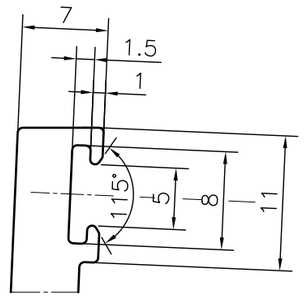

DETAIL A
SCALE 2:1

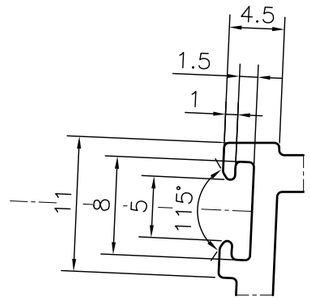

DETAIL B
SCALE 2:1

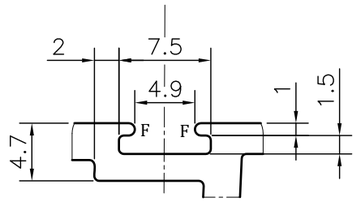

DETAIL C
SCALE 2:1

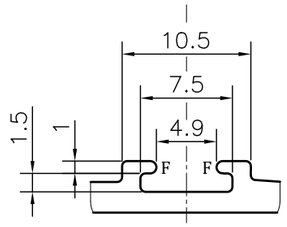

DETAIL D
SCALE 2:1

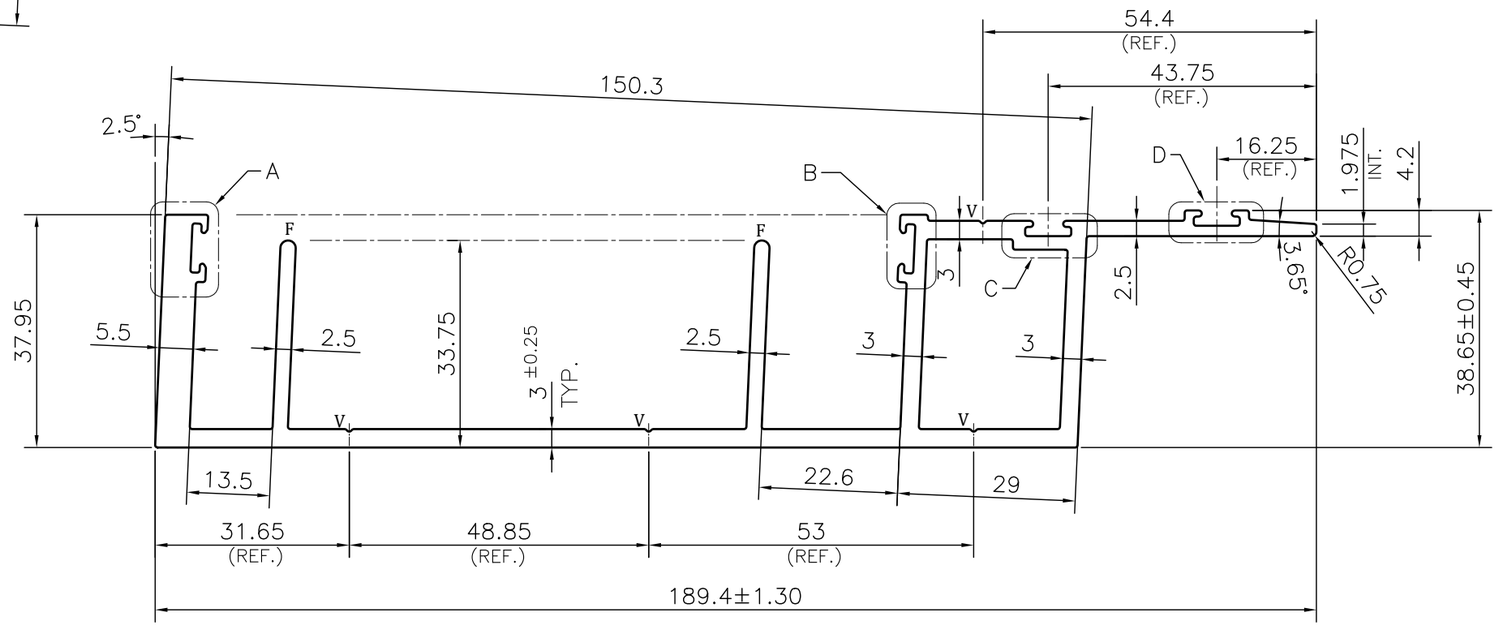

NOTE:-
F= FULL RADIUS (4 PLACES)
V= 0.4x90° V-GROOVE (4 PLACES)

1. STRAIGHTNESS= 1.7mm/M
2. TWIST= 1.7mm/M
3. ANGULARITY= ±2°
4. FLATNESS= 0.007xWIDTH

Q01909

CONTROLLED COPY

JINDAL
SYMBOL OF QUALITY
AN ISO 9001 COMPANY

JINDAL ALUMINIUM LTD.
BHIWADI-301019 (INDIA)

1. ALL DIMENSIONS ARE IN mm.
2. ROUND OFF ALL SHARP CORNERS WITH 0.40 mm.
3. TOLERANCES WILL BE AS PER BS:EN-755-9 , UNLESS OTHERWISE SPECIFIED

	NAME	DATE
DRAWN	S.K.SHARMA	03-06-2024
CHECKED	PARVESH	08-06-2024
APPROVED	J.N.RAI	08-06-2024

SCALE	1:1
AREA mm^2	1162.069
PERIMETER mm.	683.888
WEIGHT kg/m	3.138

DRAWING No.	SECTION No.
P-JAL-B-570-1	7000002503
G102323	G102323

PARTY'S NAME	K.S.V INFRABUILD, GRATER NOIDA
PARTY'S DRAWING No.	AS PER CAD DRAWING-KSV_OPUS_05
ALLOY & TEMPER	6063 T6 — PRODUCT CODE:-055 — HSN CODE:- 76042100
DESCRIPTION	CURTAIN WALL SECTION

TOLERANCE CHART CD = CIRCUMSCRIBING CIRCLE

DIMENSION	CD≤100	100<CD≤200	200<CD≤300	300<CD≤500
UPTO 10mm	±0.25	±0.30	±0.35	±0.40
10.0 -25.0	±0.30	±0.40	±0.50	±0.60
25.0 -50.0	±0.50	±0.60	±0.80	±0.90
50.0 -100	±0.70	±0.90	±1.10	±1.30
100 - 150	-	±1.10	±1.30	±1.50
150 - 200	-	±1.3	±1.50	±1.80
200 - 300	-	-	±1.70	±2.10
300 - 450	-	-	-	±2.80