P-JAL-B-572-1

G102325

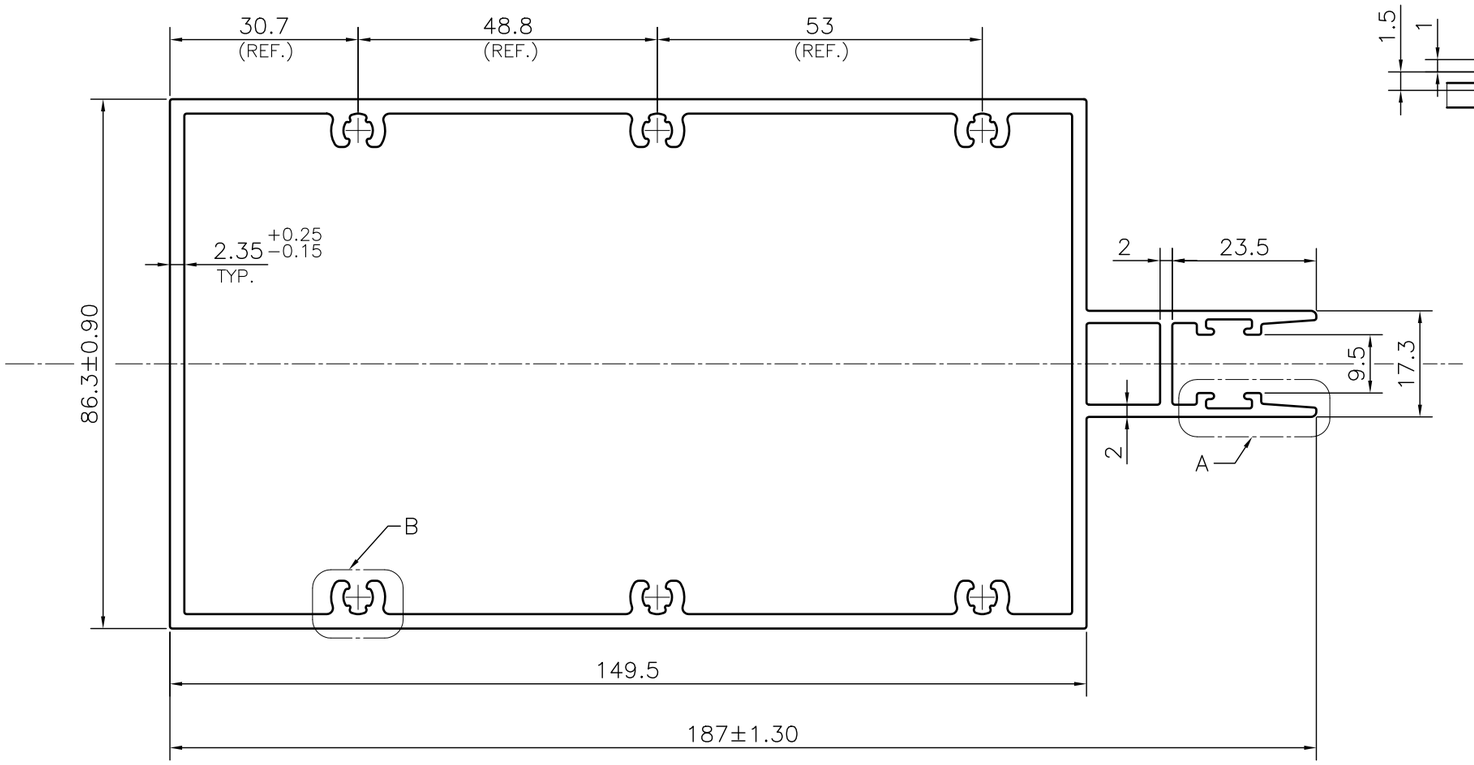


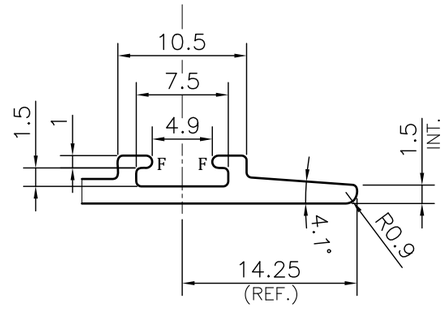


*DETAIL A*
*SCALE 2:1*

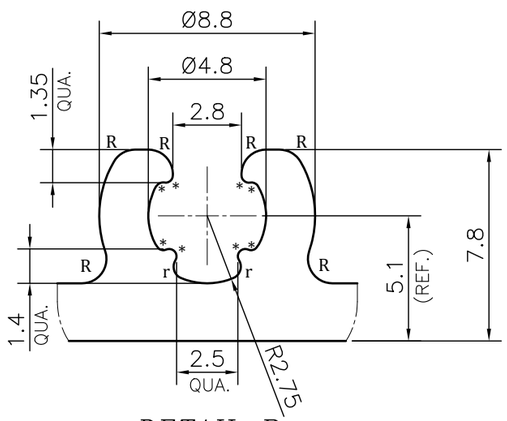


*DETAIL B*
*SCALE 4:1*

**NOTE:-**
**R= 1.0 RADIUS (36 PLACES)**
**r= 0.50 RADIUS (12 PLACES)**
***= 0.30 RADIUS (48 PLACES)**
**F= FULL RADIUS (4 PLACES)**

1. STRAIGHTNESS= 1.7mm/M
2. TWIST= 1.7mm/M
3. ANGULARITY= ±2°
4. FLATNESS= 0.007xWIDTH

TOLERANCE CHART CD = CIRCUMSCRIBING CIRCLE

| DIMENSION | CD≤100 | 100<CD≤200 | 200<CD≤300 | 300<CD≤500 |
|---|---|---|---|---|
| UPTO 10mm | ±0.25 | ±0.30 | ±0.35 | ±0.40 |
| 10.0 −25.0 | ±0.30 | ±0.40 | ±0.50 | ±0.60 |
| 25.0 −50.0 | ±0.50 | ±0.60 | ±0.80 | ±0.90 |
| 50.0 −100 | ±0.70 | ±0.90 | ±1.10 | ±1.30 |
| 100 − 150 | − | ±1.10 | ±1.30 | ±1.50 |
| 150 − 200 | − | ±1.3 | ±1.50 | ±1.80 |
| 200 − 300 | − | − | ±1.70 | ±2.10 |
| 300 − 450 | − | − | − | ±2.80 |

Q01911

CONTROLLED COPY

JINDAL
SYMBOL OF QUALITY
AN ISO 9001 COMPANY

*JINDAL ALUMINIUM LTD.*
*BHIWADI-301019 (INDIA)*

1. ALL DIMENSIONS ARE IN mm.
2. ROUND OFF ALL SHARP CORNERS WITH 0.40 mm.
3. TOLERANCES WILL BE AS PER BS:EN-755-9 , UNLESS OTHERWISE SPECIFIED

| | | |
|---|---|---|
| PARTY'S NAME | K.S.V INFRABUILD, GRATER NOIDA | |
| PARTY'S DRAWING No. | AS PER CAD DRAWING-KSV_OPUS_07 | |
| ALLOY & TEMPER | 6063 T6 | PRODUCT CODE:-055<br>HSN CODE:- 76042100 |
| DESCRIPTION | CURTAIN WALL SECTION | |

| | NAME | DATE |
|---|---|---|
| DRAWN | ASHUTOSH | 04-06-2024 |
| CHECKED | PARVESH | 08-06-2024 |
| APPROVED | J.N.RAI | 08-06-2024 |
| SCALE | | 1:1 |
| AREA $mm^2$ | | 1421.801 |
| PERIMETER mm. | | 613.51 |
| WEIGHT kg/m | | 3.839 |

| DRAWING No. | SECTION No. |
|---|---|
| P-JAL-B-572-1 | 7000002505 |
| G102325 | G102325 |