P-JAL-B-573
G102326

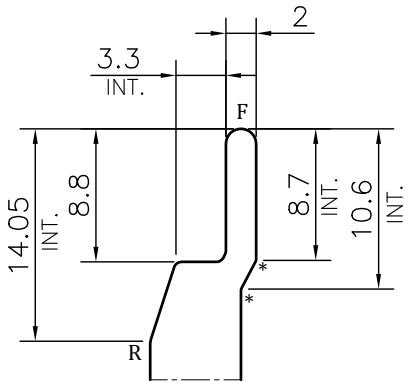

DETAIL A
SCALE 2:1

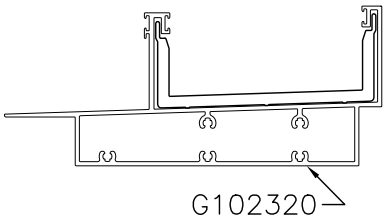

MATCHING
SCALE 1:4

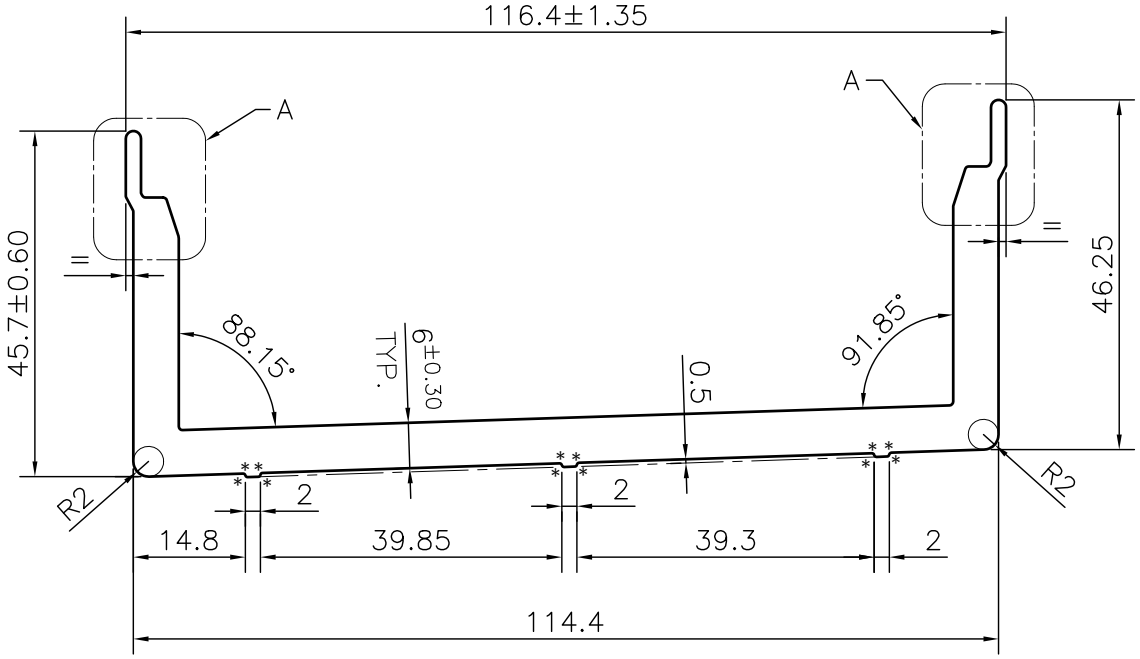

NOTE:-
***= 0.30 RADIUS (16 PLACES)**
R= 1.0 RADIUS (2 PLACES)
F= FULL RADIUS (2 PLACES)

☞ ROUND OFF ALL SHARP CORNERS WITH 0.50 mm.

TOLERANCE CHART CD = CIRCUMSCRIBING CIRCLE

DIMENSION	CD≤100	100<CD≤200	200<CD≤300	300<CD≤500
UPTO 10mm	±0.25	±0.30	±0.35	±0.40
10.0 –25.0	±0.30	±0.40	±0.50	±0.60
25.0 –50.0	±0.50	±0.60	±0.80	±0.90
50.0 –100	±0.70	±0.90	±1.10	±1.30
100 – 150	–	±1.10	±1.30	±1.50
150 – 200	–	±1.3	±1.50	±1.80
200 – 300	–	–	±1.70	±2.10
300 – 450	–	–	–	±2.80

Q01912
CONTROLLED COPY

1. STRAIGHTNESS= 1.7mm/M
2. TWIST= 1.7mm/M
3. ANGULARITY= ±2°
4. FLATNESS= 0.007xWIDTH

JINDAL
SYMBOL OF QUALITY
AN ISO 9001 COMPANY

JINDAL ALUMINIUM LTD.

BHIWADI-301019 (INDIA)

	NAME	DATE
DRAWN	ASHUTOSH	31-05-2024
CHECKED	PARVESH	08-06-2024
APPROVED	J.N.RAI	08-06-2024

1. ALL DIMENSIONS ARE IN mm.
2. ROUND OFF ALL SHARP CORNERS WITH 0.50 mm.
3. TOLERANCES WILL BE AS PER BS:EN-755-9 , UNLESS OTHERWISE SPECIFIED

SCALE	1:1
AREA mm^2	1089.491
PERIMETER mm.	397.26
WEIGHT kg/m	2.942

PARTY'S NAME	K.S.V INFRABUILD, GRATER NOIDA
PARTY'S DRAWING No.	AS PER CAD DRAWING-KSV_OPUS_08
ALLOY & TEMPER	6063 T6 — PRODUCT CODE:-055 — HSN CODE:- 76042990
DESCRIPTION	CURTAIN WALL SECTION

DRAWING No.	SECTION No.
P-JAL-B-573	7000002506
G102326	G102326