P-JAL-B-960

G103583

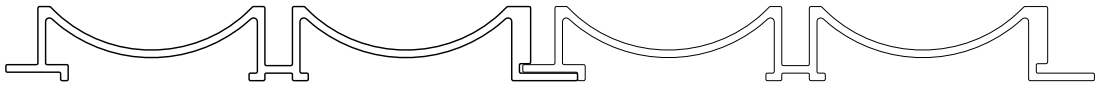

SELF MATCHING
SCALE 1:2

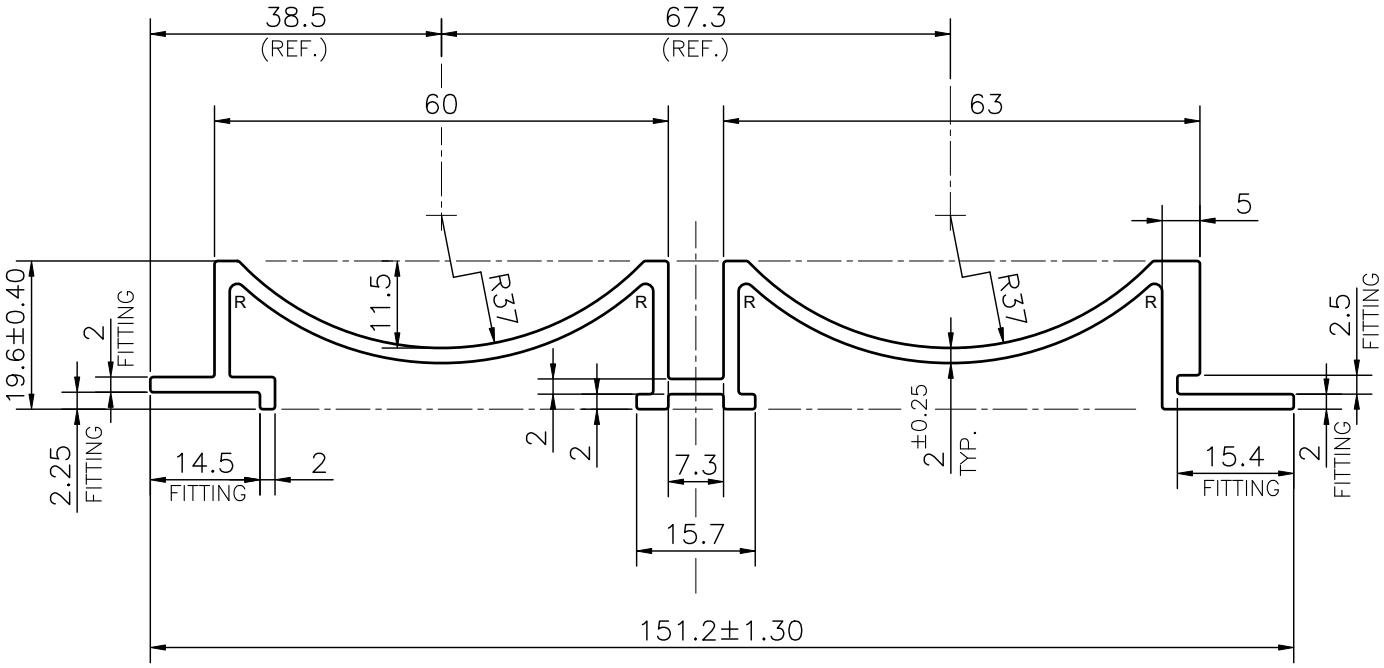

NOTE:-
R= 1.0 RADIUS (4 PLACES)

1. STRAIGHTNESS= 1.7mm/M
2. TWIST= 1.7mm/M
3. ANGULARITY= ±2°
4. FLATNESS= 0.007xWIDTH

Q03053

CONTROLLED COPY

SYMBOL OF QUALITY
AN ISO 9001 COMPANY

JINDAL ALUMINIUM LTD.

BHIWADI-301019 (INDIA)

	NAME	DATE
DRAWN	ASHUTOSH	12-02-2025
CHECKED	PARVESH	19-02-2025
APPROVED	R.G.PAREKH	19-02-2025

1. ALL DIMENSIONS ARE IN mm.
2. ROUND OFF ALL SHARP CORNERS WITH 0.40 mm.
3. TOLERANCES WILL BE AS PER BS:EN-755-9 , UNLESS OTHERWISE SPECIFIED

SCALE	1:1
AREA mm^2	538.475
PERIMETER mm.	486.27
WEIGHT kg/m	1.454

PARTY'S NAME	BUILDING SOLUTIONS (INDIA) PRIVATE LIMITED
PARTY'S DRAWING No.	AS PER SAMPLE & PROPOSAL
ALLOY & TEMPER	6063 T6 — PRODUCT CODE:-041 — HSN CODE:- 76042990
DESCRIPTION	STEP EDGING SECTION

DRAWING No.	SECTION No.
P-JAL-B-960	7000003806
G103583	G103583