P-JAL-B-1004

G103766

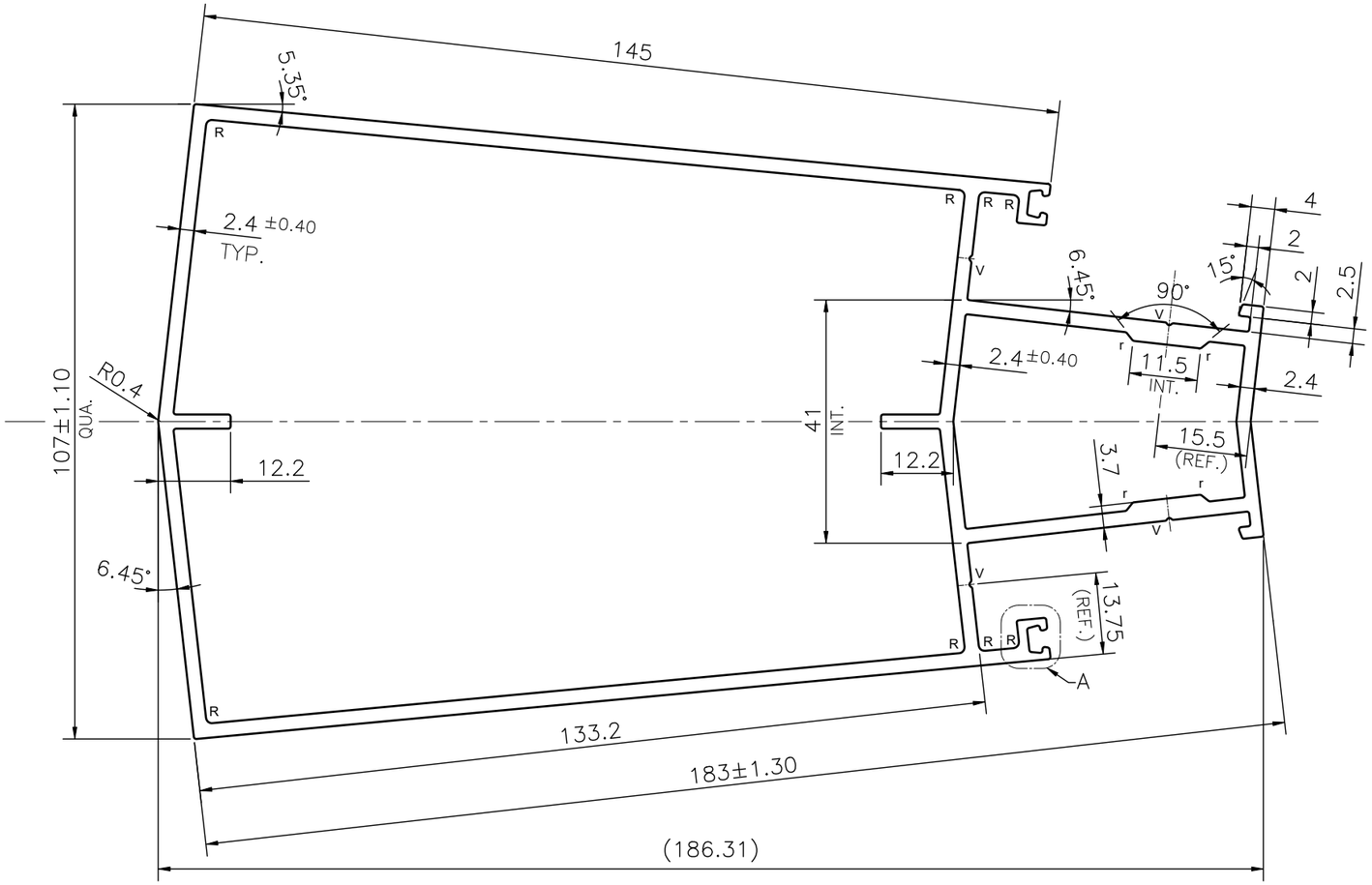

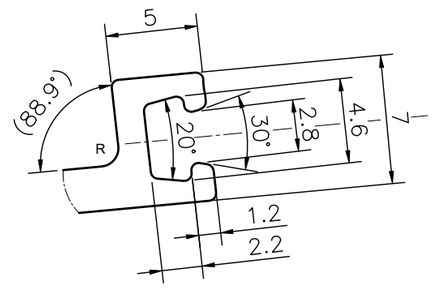

DETAIL A
SCALE 3:1

NOTE:-
r= 0.60 RADIUS (4 PLACES)
R= 1.0 RADIUS (8 PLACES)
V= 0.4x90° V-GROOVE (4 PLACES)

1. STRAIGHTNESS= 1.7mm/M
2. TWIST= 1.7mm/M
3. ANGULARITY= ±2°
4. FLATNESS= 0.007xWIDTH

Q03207

CONTROLLED COPY

SYMBOL OF QUALITY
AN ISO 9001 COMPANY

JINDAL ALUMINIUM LTD.
BHIWADI-301019 (INDIA)

	NAME	DATE
DRAWN	ASHUTOSH	31-03-2025
CHECKED	PARVESH	11-04-2025
APPROVED	J.N.RAI	11-04-2025

1. ALL DIMENSIONS ARE IN mm.
2. ROUND OFF ALL SHARP CORNERS WITH 0.40 mm.
3. TOLERANCES WILL BE AS PER BS:EN-755-9 , UNLESS OTHERWISE SPECIFIED

SCALE	1:1
AREA mm^2	1556.357
PERIMETER mm.	649.021
WEIGHT kg/m	4.202

PARTY'S NAME	AXSYS SOLUTION, HIMACHAL PRADESH
PARTY'S DRAWING No.	AS PER CAD & PROPOSAL DRAWING-MULLION
ALLOY & TEMPER	6063 T6 — PRODUCT CODE:-055 — HSN CODE:- 76042100
DESCRIPTION	CURTAIN WALL SECTION-MULLION

DRAWING No.	SECTION No.
P-JAL-B-1004	7000004053
G103766	G103766