P-14633

S4479

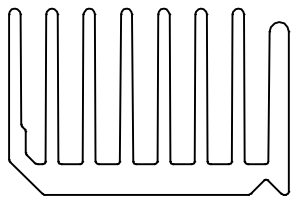

SCALE:- 1:1

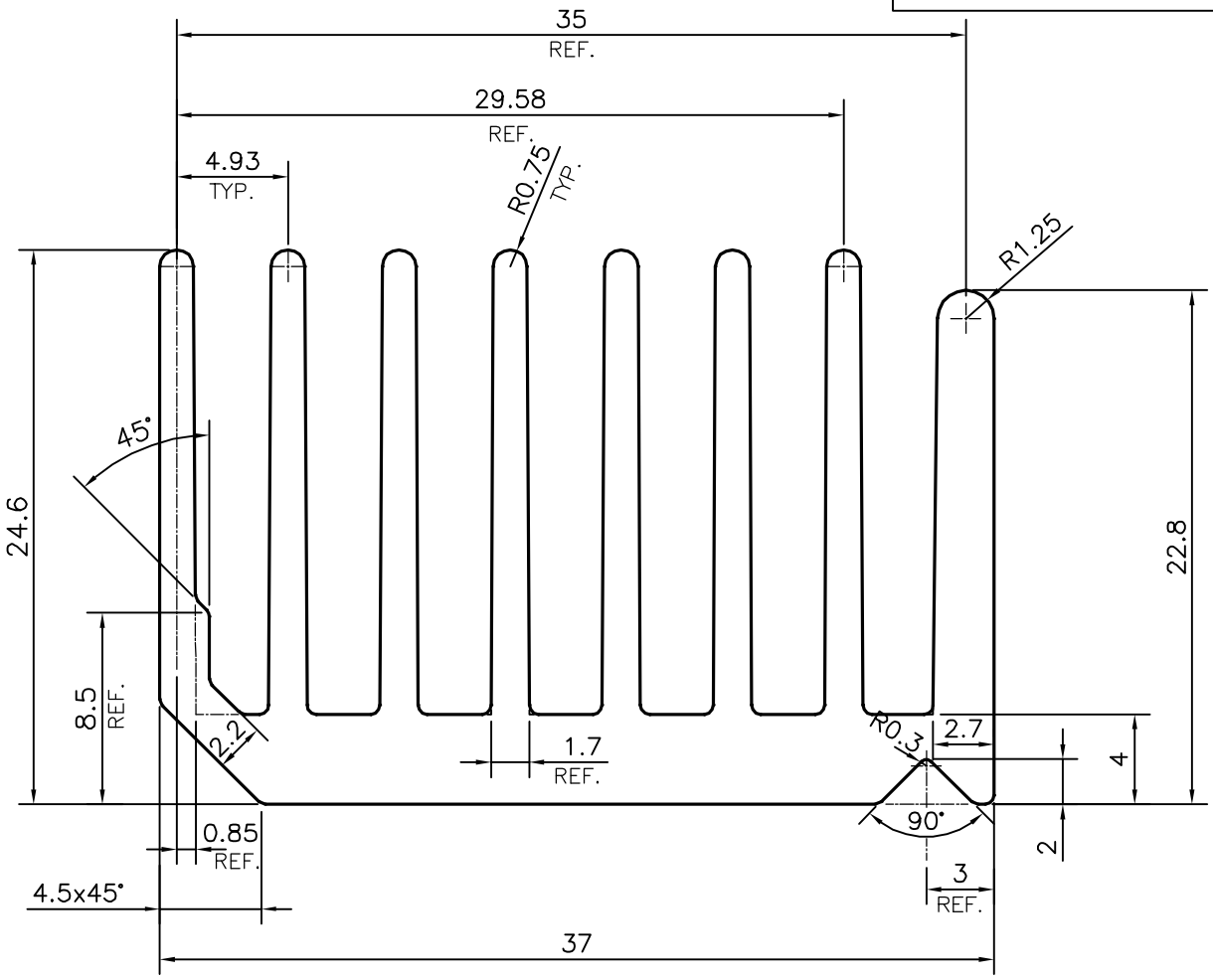

			NAME	DATE
JINDAL SYMBOL OF QUALITY AN ISO 9001 COMPANY	JINDAL ALUMINIUM LTD. BANGALORE-560073 (INDIA)	DRAWN	J.P.KAUSHIK	08-05-2015
		CHECKED		
		APPROVED	S.S.GARG	01-06-2015

1. ALL DIMENSIONS ARE IN mm.
2. ROUND OFF ALL SHARP CORNERS WITH 0.40 mm.
3. TOLERANCES WILL BE AS PER IS:3965-1981, UNLESS OTHERWISE SPECIFIED

SCALE	3:1
AREA mm^2	413.322
PERIMETER mm.	396.24
WEIGHT kg/m	1.116

PARTY'S NAME	GALLANT ELECTRONIC CONTROLS, BANGALORE
PARTY'S DRAWING No.	MODIFIED OF SECTION No:-S4372
ALLOY & TEMPER	HE9 WP
DESCRIPTION	HEAT SINK SECTION

DRAWING No.	SECTION No.
P-14633	-
S4479	S4479