P-13636-1

S4483

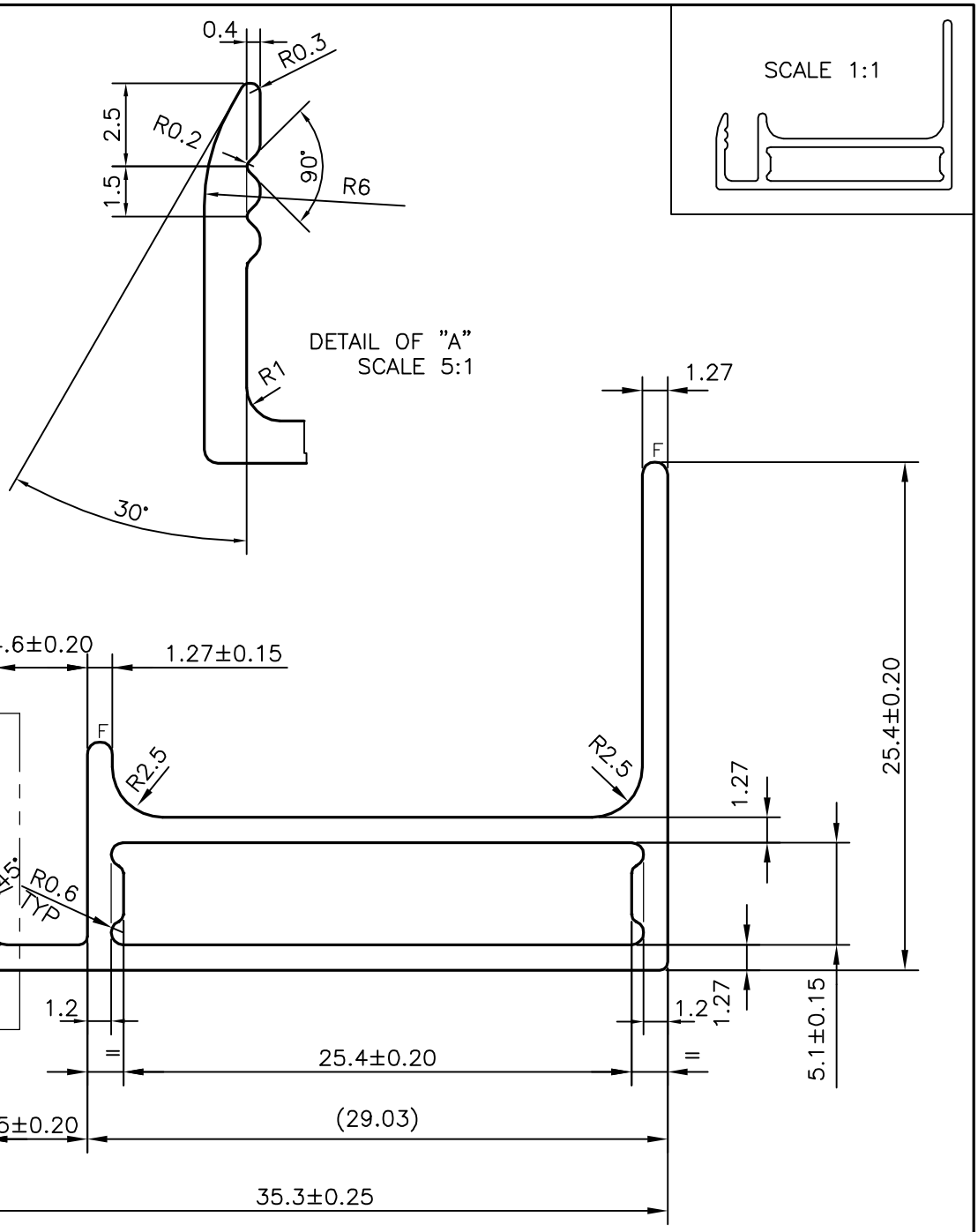

F = FULL RADIUS (2 PLACES)

JINDAL SYMBOL OF QUALITY AN ISO 9001 COMPANY	*JINDAL ALUMINIUM LTD.* *BANGALORE-560073 (INDIA)*		NAME	DATE
		DRAWN	J.P.KAUSHIK	25-05-2015
		CHECKED		
		APPROVED	S.S.GARG	04-06-2015

1. ALL DIMENSIONS ARE IN mm.
2. ROUND OFF ALL SHARP CORNERS WITH 0.40 mm.
3. TOLERANCES WILL BE AS PER IS:6477-1983 UNLESS OTHERWISE SPECIFIED

SCALE	3:1
AREA mm^2	140.652
PERIMETER mm.	144.979
WEIGHT kg/m	0.380

PARTY'S NAME	VIKRAM SOLAR PVT. LTD., KOLKATA
PARTY'S DRAWING No.	VSPL/PRN/116/10
ALLOY & TEMPER	6063 T6
DESCRIPTION	SOLAR SECTION-PV FRAME 3.2mm. GLASS

DRAWING No.	SECTION No.
P-13636-1	–
S4483	S4483