P–15079
S4605

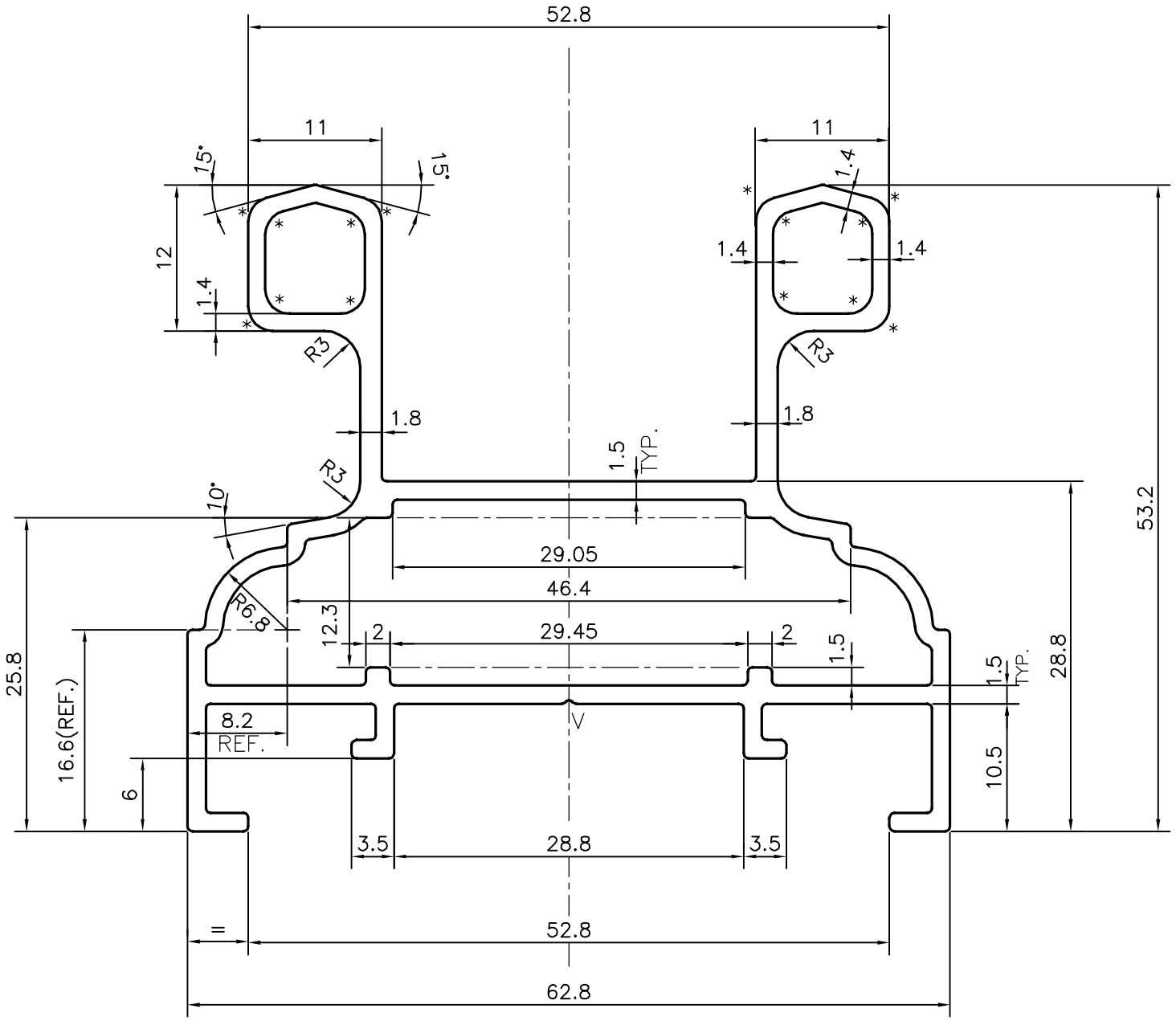

V = V GROOVE 0.3x90°
* = 2.0 RADIUS (14 PLACES)

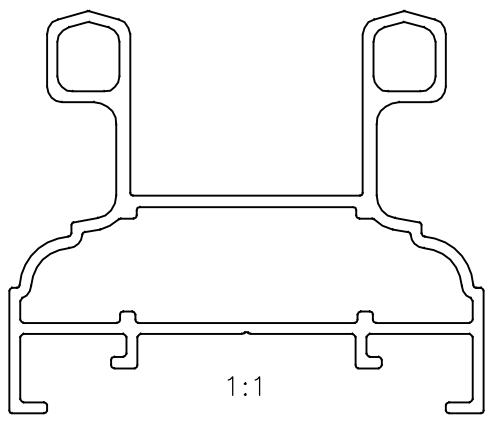

JINDAL SYMBOL OF QUALITY AN ISO 9001 COMPANY	*JINDAL ALUMINIUM LTD.* *BANGALORE–560073 (INDIA)*		NAME	DATE
		DRAWN	J.P.KAUSHIK	20–08–2015
		CHECKED		
		APPROVED	S.S.GARG	24–08–2015
1. ALL DIMENSIONS ARE IN mm. 2. ROUND OFF ALL SHARP CORNERS WITH 0.40 mm. 3. TOLERANCES WILL BE AS PER IS:6477–1983 , UNLESS OTHERWISE SPECIFIED		SCALE		2:1
		AREA mm^2		447.827
		PERIMETER mm.		352.827
		WEIGHT kg/m		1.209
PARTY'S NAME	KARAM DASS NIRAASH, MANDI	DRAWING No.		SECTION No.
PARTY'S DRAWING No.	SW–1	P–15079		–
ALLOY & TEMPER	6063 T6	S4605		S4605
DESCRIPTION	WINDOW SECTION			