P-14893-2
S4622

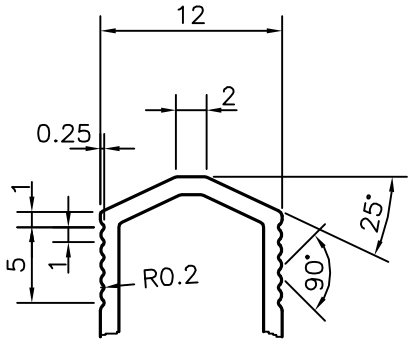

DETAIL OF "A"
SCALE 2:1

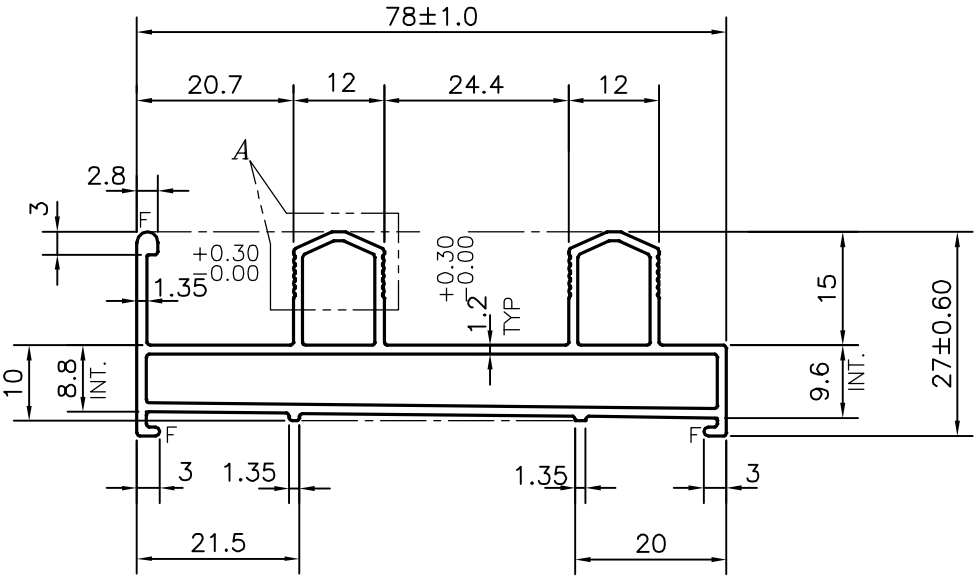

F = FULL RADIUS(3 PLACES)

			NAME	DATE
JINDAL SYMBOL OF QUALITY AN ISO 9001 COMPANY	*JINDAL ALUMINIUM LTD.* *BANGALORE-560073 (INDIA)*	DRAWN	J.P.KAUSHIK	28-08-2015
		CHECKED		
		APPROVED	S.S.GARG	31-08-2015

1. ALL DIMENSIONS ARE IN mm.
2. ROUND OFF ALL SHARP CORNERS WITH 0.40 mm.
3. TOLERANCES WILL BE AS PER IS:6477-1983 , UNLESS OTHERWISE SPECIFIED

SCALE	1:1
AREA mm^2	325.199
PERIMETER mm.	279.523
WEIGHT kg/m	0.878

PARTY'S NAME	PARAMOUNT INDUSTRIES, BANGALORE
PARTY'S DRAWING No.	P-AL172414LWA2
ALLOY & TEMPER	HE9 WP
DESCRIPTION	WINDOW SECTION

DRAWING No.	SECTION No.
P-14893-2	–
S4622	S4622