P-15142	
S4661	

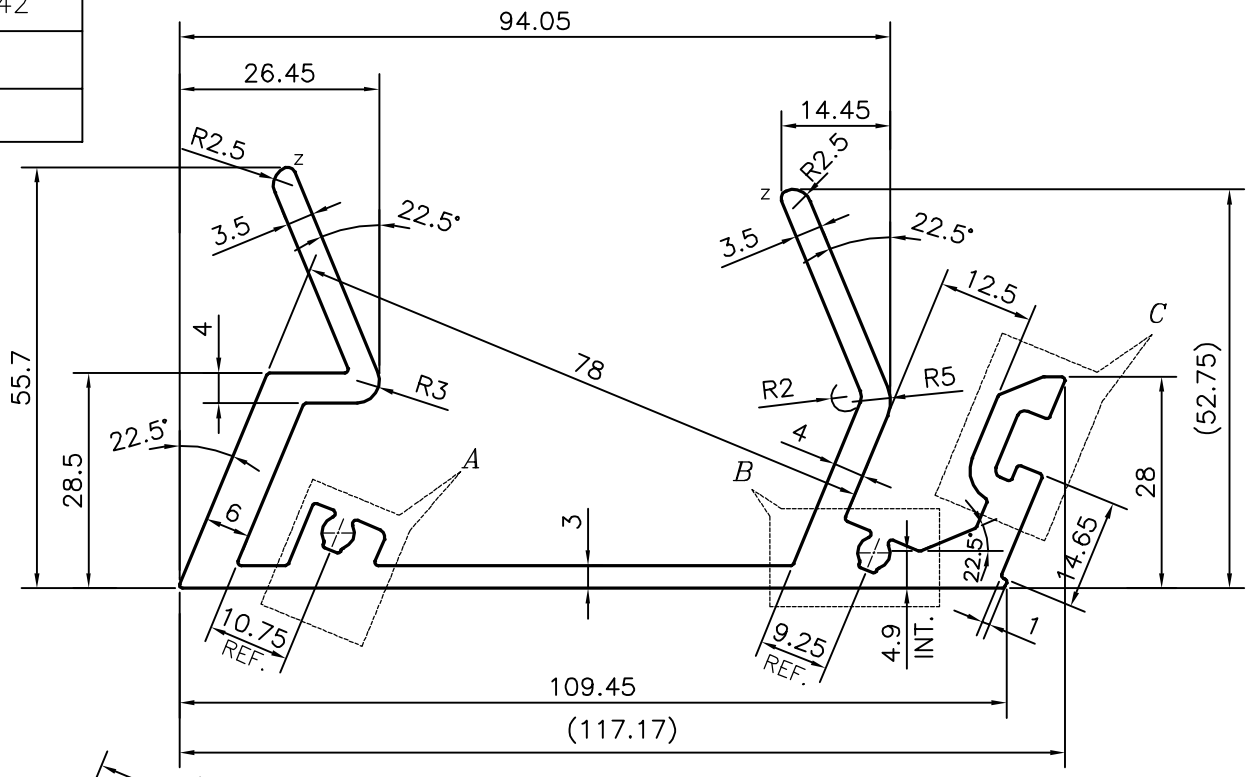

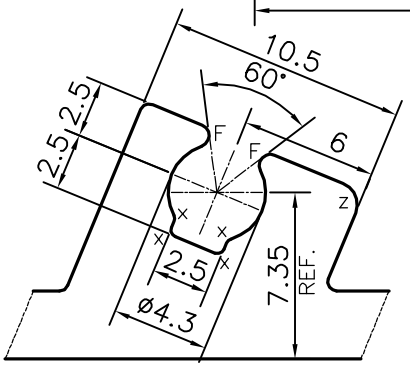

DETAIL OF "A"
SCALE 3:1

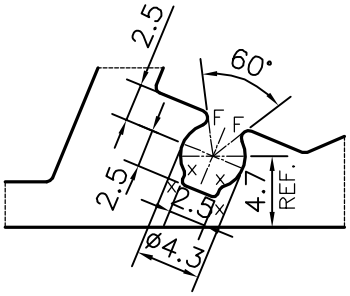

DETAIL OF "B"
SCALE 2:1

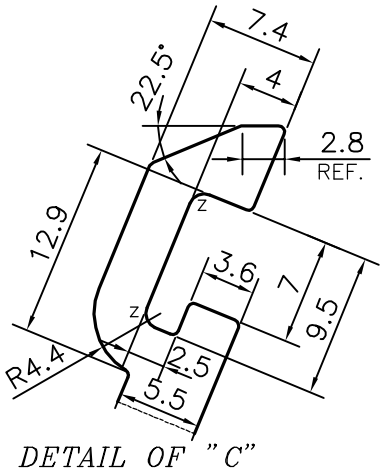

DETAIL OF "C"
SCALE 2:1

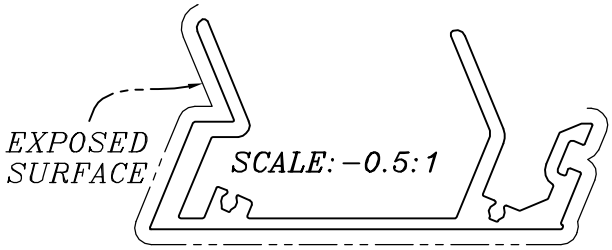

AVERAGE THICKNESS HAS TO BE MAINTAINED WITH IN ±0.20 mm. OF THE NOMINAL VALUE.

Z = RADIUS 1 mm. (5 PLACES)
X = RADIUS 0.3 mm. (8 PLACES)
F = FULL RADIUS (4 PLACES)

TOLERANCES ON OVERALL WIDTHS & WIDTHS ACROSS FLATS OF BARS, & REGULAR SECTIONS

UPTO 6.40mm – ±0.20	UPTO 32.0mm – ±0.38	UPTO 120.0mm – ±0.85	1. STRAIGHTNESS=1.7mm/M
UPTO 10.0mm – ±0.23	UPTO 50.0mm – ±0.46	UPTO 160.0mm – ±1.02	2. TWIST=1.7mm/M
UPTO 12.0mm – ±0.25	UPTO 60.0mm – ±0.53	UPTO 200.0mm – ±1.14	3. ANGULARITY= ±2°
UPTO 16.0mm – ±0.28	UPTO 80.0mm – ±0.69	UPTO 250.0mm – ±1.40	4. FLATNESS =0.007xWIDTH
UPTO 25.0mm – ±0.30	UPTO 100.0mm – ±0.75	UPTO 300.0mm – ±1.65	

JINDAL
SYMBOL OF QUALITY
AN ISO 9001 COMPANY

JINDAL ALUMINIUM LTD.

BANGALORE-560073 (INDIA)

	NAME	DATE
DRAWN	*PARVESH*	04-09-2015
CHECKED		
APPROVED	S.S.GARG	14-09-2015

1. ALL DIMENSIONS ARE IN mm.
2. ROUND OFF ALL SHARP CORNERS WITH 0.40 mm.
3. TOLERANCES WILL BE AS PER IS:3965-1981 , UNLESS OTHERWISE SPECIFIED

SCALE	1:1
AREA mm^2	1074.581
PERIMETER mm.	545.388
WEIGHT kg/m	2.901

PARTY'S NAME	OMKAR REALTORS & DEVELOPERS PVT LTD., MUMBAI
PARTY'S DRAWING No.	AS PER AUTOCAD DRAWING-AP-1600
ALLOY & TEMPER	6063 T6
DESCRIPTION	CURTAIN WALL SECTION

DRAWING No.	SECTION No.
P-15142	–
S4661	S4661