P-14962-2

S4715

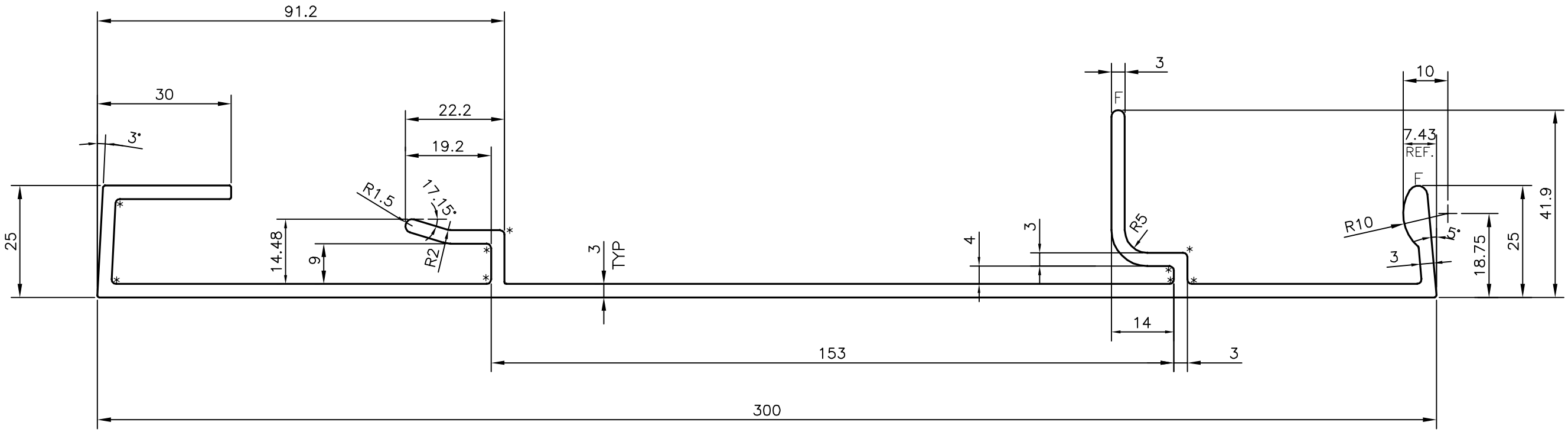

F = FULL RADIUS (2 PLACES)
* = R1.0 mm (9 PLACES)

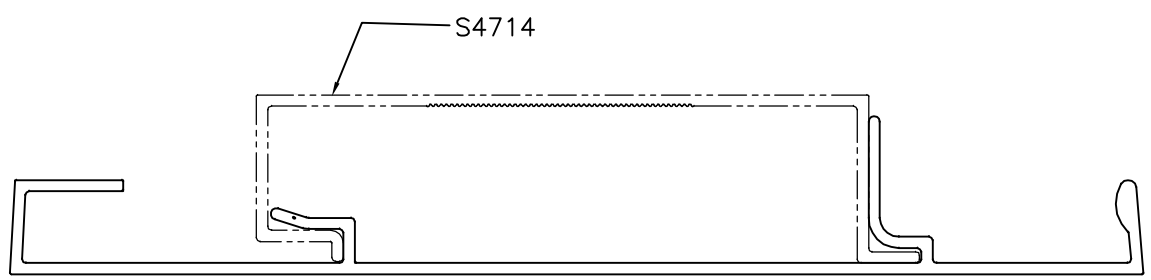

JINDAL SYMBOL OF QUALITY AN ISO 9001 COMPANY	*JINDAL ALUMINIUM LTD.* *BANGALORE-560073 (INDIA)*		NAME	DATE
		DRAWN	J.P.KAUSHIK	29-09-2015
		CHECKED		
		APPROVED	S.S.GARG	26-10-2015
1. ALL DIMENSIONS ARE IN mm. 2. ROUND OFF ALL SHARP CORNERS WITH 0.40 mm. 3. TOLERANCES WILL BE AS PER IS:3965-1981 UNLESS OTHERWISE SPECIFIED		SCALE		1:1
		AREA mm^2		1379.846
		PERIMETER mm.		901.428
		WEIGHT kg/m		3.726
PARTY'S NAME	ALUMAYER INDIA PVT. LTD., MUMBAI	DRAWING No.		SECTION No.
PARTY'S DRAWING No.	NCP-72	P-14962-2		–
ALLOY & TEMPER	6063 T6	S4715		S4715
DESCRIPTION	MISC SECTION			