P-15309

S4795

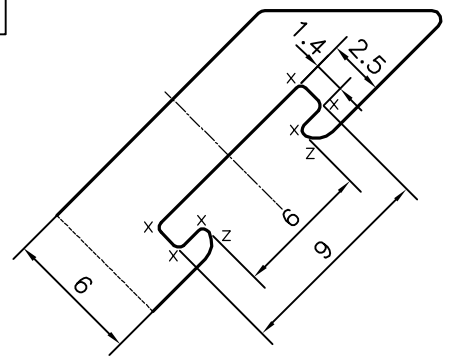

DETAIL OF "A"
SCALE 3:1

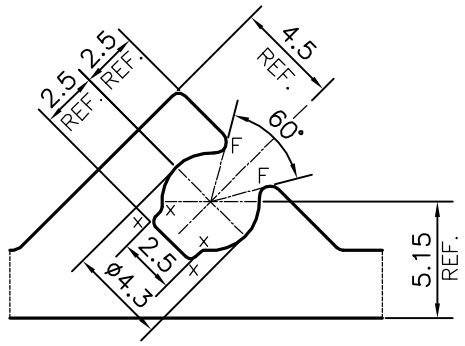

DETAIL OF "B"
SCALE 3:1

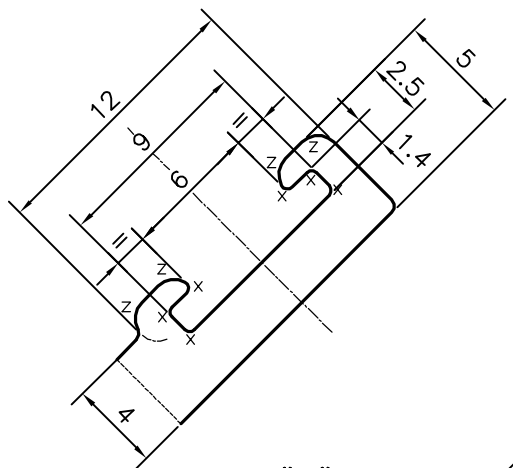

DETAIL OF "C"
SCALE 3:1

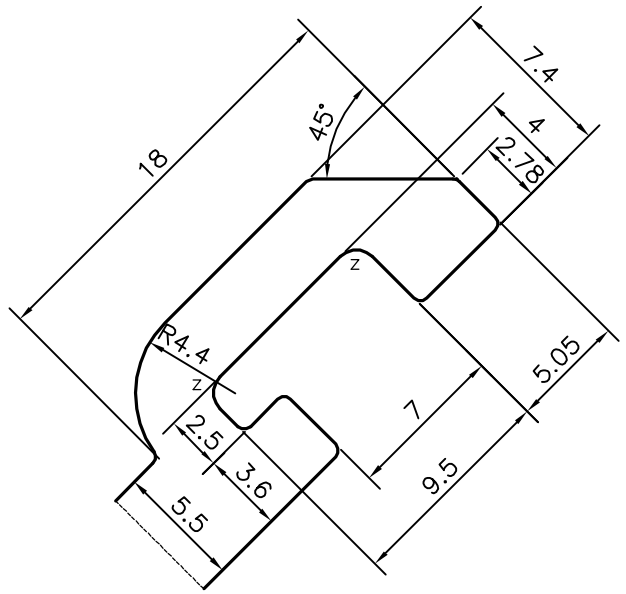

DETAIL OF "D"
SCALE 3:1

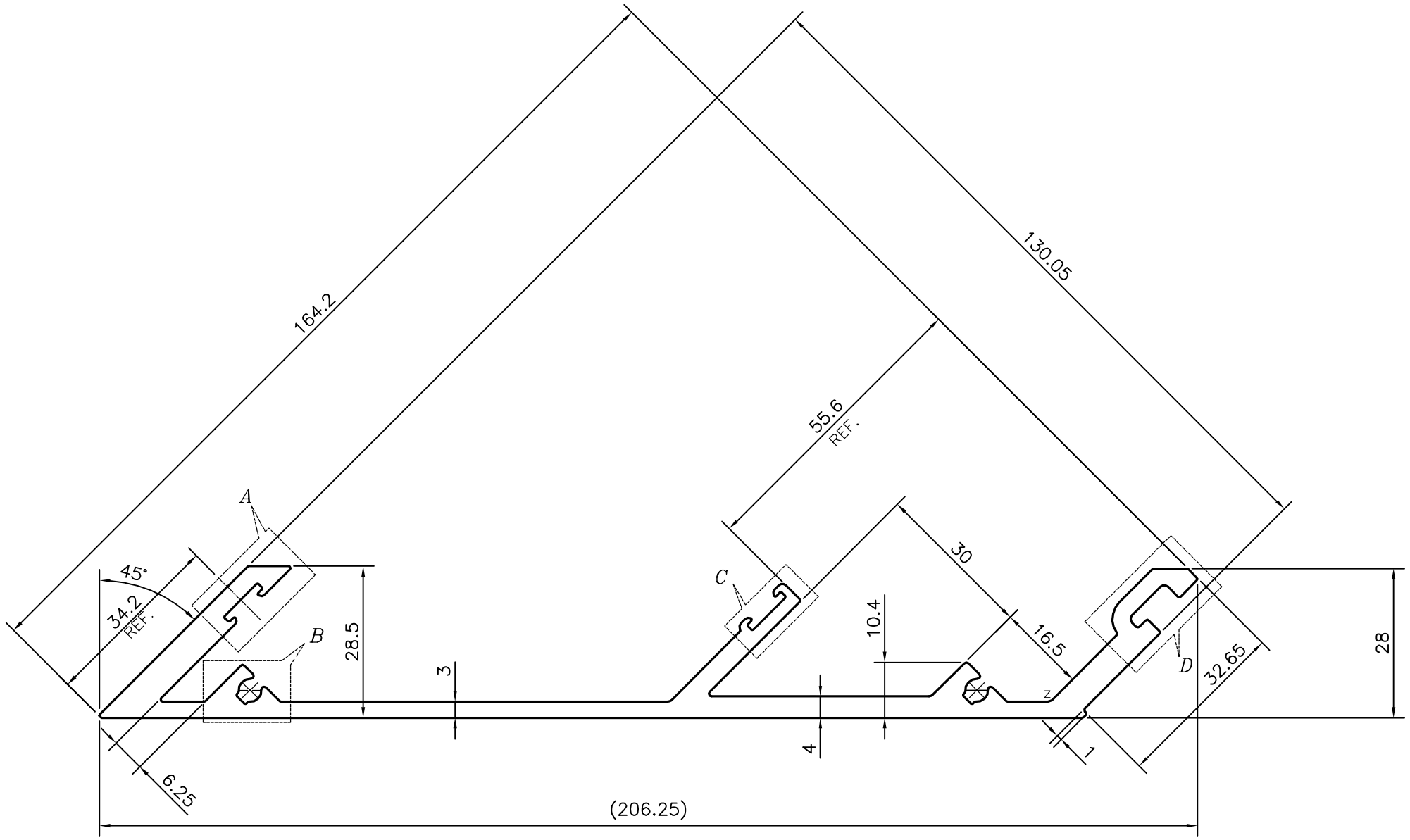

TOLERANCE ON THICKNESS $^{+0.30}_{-0.10}$

ANGULARITY= ±2°

X = RADIUS 0.3mm. (20 PLACES)
Z = RADIUS 1 mm. (9 PLACES)
F = FULL RADIUS (4 PLACES)

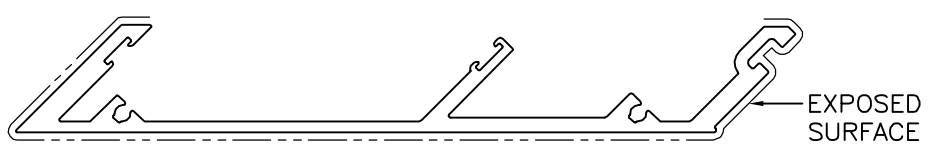

			NAME	DATE
SYMBOL OF QUALITY AN ISO 9001 COMPANY	JINDAL ALUMINIUM LTD. BANGALORE-560073 (INDIA)	DRAWN	J.P.KAUSHIK	13-11-2015
		CHECKED		
		APPROVED	S.S.GARG	22-12-2015
1. ALL DIMENSIONS ARE IN mm. 2. ROUND OFF ALL SHARP CORNERS WITH 0.40 mm. 3. TOLERANCES WILL BE AS PER IS:3965-1981 , UNLESS OTHERWISE SPECIFIED		SCALE		1:1
		AREA mm²		1155.466
		PERIMETER mm.		629.523
		WEIGHT kg/m		3.120
PARTY'S NAME	OMKAR REALTORS & DEVELOPERS PVT LTD., MUMBAI	DRAWING No.		SECTION No.
PARTY'S DRAWING No.	AS PER AUTOCAD DRAWING-AP-1624	P-15309		–
ALLOY & TEMPER	6063 T6	S4795		S4795
DESCRIPTION	CURTAIN WALL SECTION			