P–15311
S4797

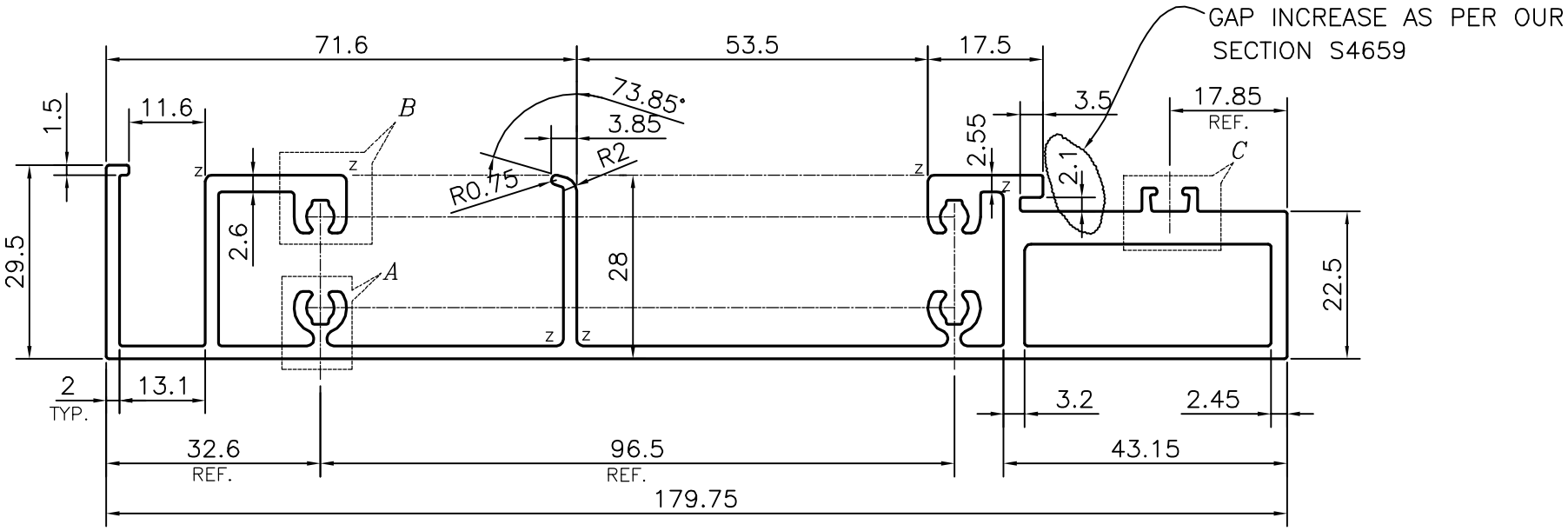

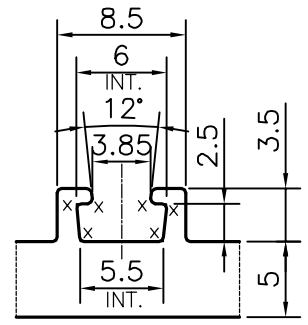

DETAIL OF "C"
SCALE 2:1

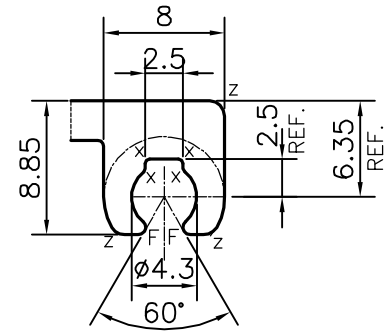

DETAIL OF "B"
SCALE 2:1

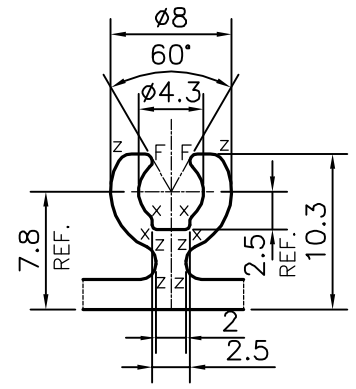

DETAIL OF "A"
SCALE 2:1

TOLERANCE ON THICKNESS $^{+0.30}_{-0.10}$

ANGULARITY= ±2°

Z = RADIUS 1 mm. (24 PLACES)
X = RADIUS 0.3 mm. (16 PLACES)
F = FULL RADIUS (8 PLACES)

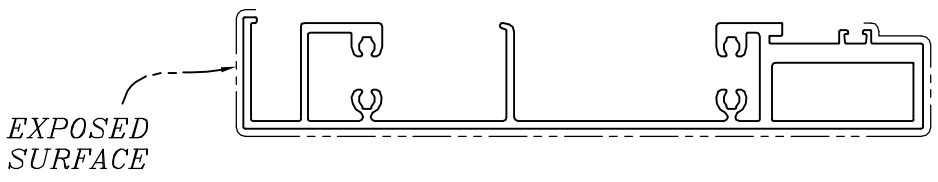

JINDAL SYMBOL OF QUALITY AN ISO 9001 COMPANY	*JINDAL ALUMINIUM LTD.* *BANGALORE–560073 (INDIA)*		
1. ALL DIMENSIONS ARE IN mm. 2. ROUND OFF ALL SHARP CORNERS WITH 0.40 mm. 3. TOLERANCES WILL BE AS PER IS:6477–1983 , UNLESS OTHERWISE SPECIFIED			
PARTY'S NAME	OMKAR REALTORS & DEVELOPERS PVT LTD., MUMBAI		
PARTY'S DRAWING No.	AS PER AUTOCAD DRAWING–AP–1625		
ALLOY & TEMPER	6063 T6		
DESCRIPTION	CURTAIN WALL SECTION		

	NAME	DATE
DRAWN	J.P.KAUSHIK	13–11–2015
CHECKED		
APPROVED	S.S.GARG	22–12–2015
SCALE		1:1
AREA mm^2		1068.035
PERIMETER mm.		767.541
WEIGHT kg/m		2.884

DRAWING No.	SECTION No.
P–15311	–
S4797	S4797