P-15275-1
S4799

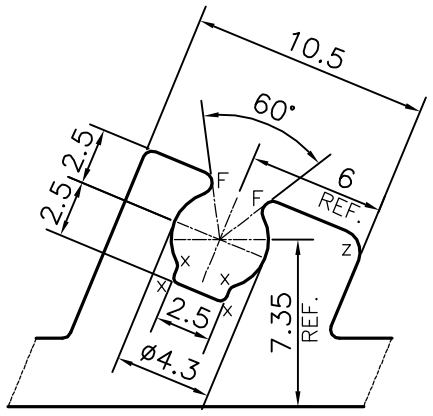

DETAIL OF "A"
SCALE 3:1

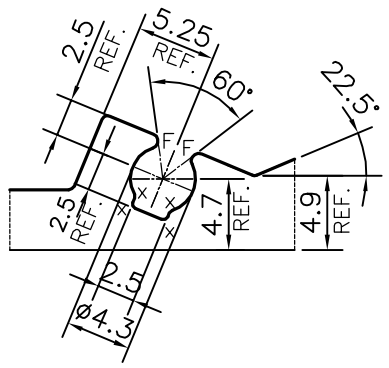

DETAIL OF "B"
SCALE 2:1

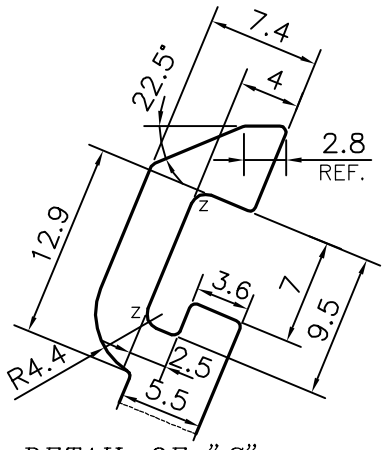

DETAIL OF "C"
SCALE 2:1

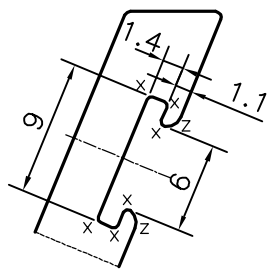

DETAIL OF "D"
SCALE 2:1

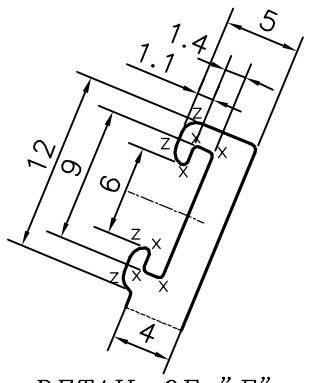

DETAIL OF "E"
SCALE 2:1

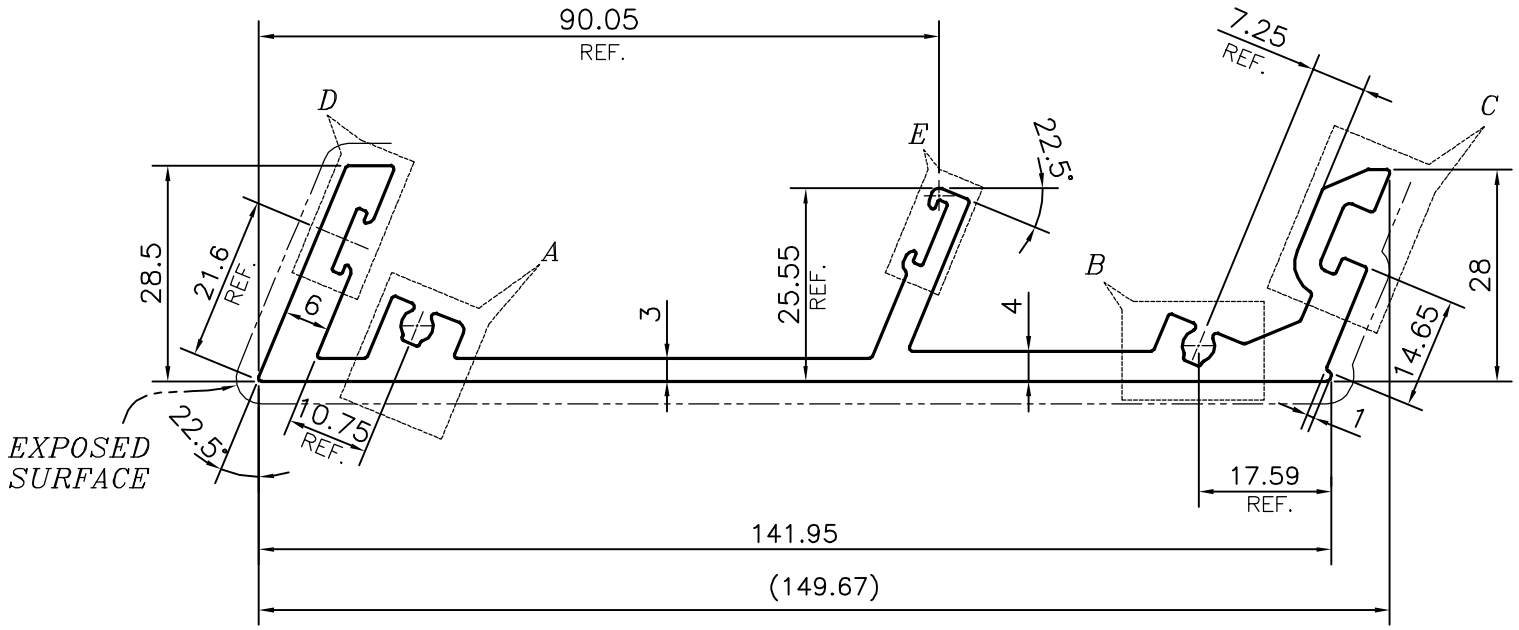

☞ ***TOLERANCE ON THICKNESS*** $= {}^{+0.3}_{-0.1}$

X = RADIUS 0.3mm. (20 PLACES)
Z = RADIUS 1 mm. (9 PLACES)
F = FULL RADIUS (4 PLACES)

TOLERANCES ON OVERALL WIDTHS & WIDTHS ACROSS FLATS OF BARS, & REGULAR SECTIONS			
UPTO 6.40mm – ±0.20	UPTO 32.0mm – ±0.38	UPTO 120.0mm – ±0.85	1. STRAIGHTNESS=1.7mm/M
UPTO 10.0mm – ±0.23	UPTO 50.0mm – ±0.46	UPTO 160.0mm – ±1.02	2. TWIST=1.7mm/M
UPTO 12.0mm – ±0.25	UPTO 60.0mm – ±0.53	UPTO 200.0mm – ±1.14	3. ANGULARITY= ±2°
UPTO 16.0mm – ±0.28	UPTO 80.0mm – ±0.69	UPTO 250.0mm – ±1.40	4. FLATNESS =0.007xWIDTH
UPTO 25.0mm – ±0.30	UPTO 100.0mm – ±0.75	UPTO 300.0mm – ±1.65	

JINDAL
SYMBOL OF QUALITY
AN ISO 9001 COMPANY

JINDAL ALUMINIUM LTD.
BANGALORE-560073 (INDIA)

1. ALL DIMENSIONS ARE IN mm.
2. ROUND OFF ALL SHARP CORNERS WITH 0.40 mm.
3. TOLERANCES WILL BE AS PER IS:3965-1981 , UNLESS OTHERWISE SPECIFIED

		NAME	DATE
	DRAWN	PARVESH	09-11-2015
	CHECKED		
	APPROVED	S.S.GARG	22-12-2015
	SCALE		1:1
	AREA mm^2		937.304
	PERIMETER mm.		509.022
	WEIGHT kg/m		2.531

PARTY'S NAME	OMKAR REALTORS & DEVELOPERS PVT LTD., MUMBAI
PARTY'S DRAWING No.	AS PER AUTOCAD DRAWING-AP-1627
ALLOY & TEMPER	6063 T6
DESCRIPTION	CURTAIN WALL SECTION

DRAWING No.	SECTION No.
P-15275-1	–
S4799	S4799