P−15470
S4820

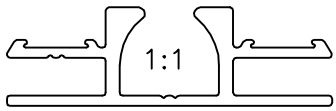

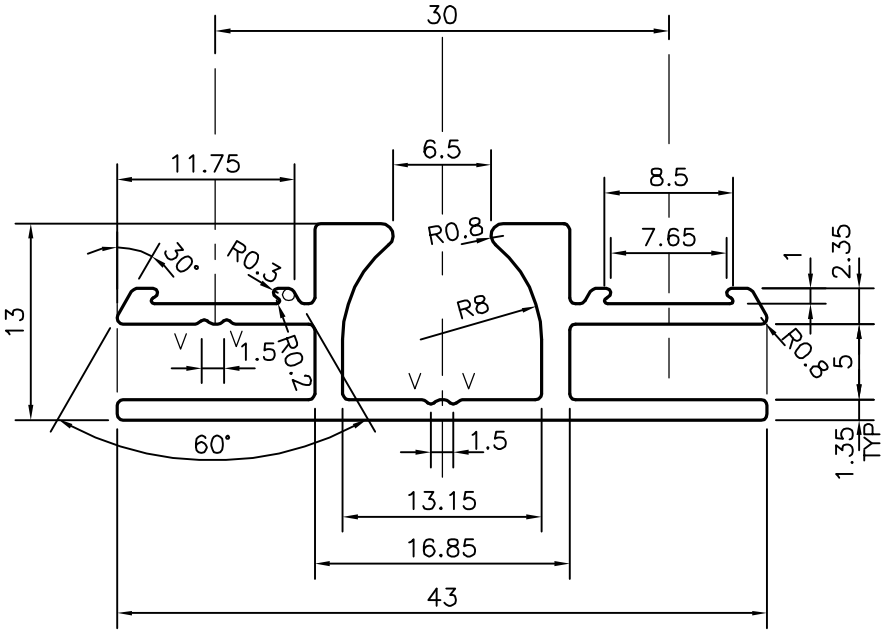

V = V GROOVE 0.3x90° (4 PLACES)

JINDAL SYMBOL OF QUALITY AN ISO 9002 COMPANY	*JINDAL ALUMINIUM LTD.* *BANGALORE−560073 (INDIA)*		NAME	DATE
		DRAWN	J.P.KAUSHIK	01−01−2016
		CHECKED		
		APPROVED	S.S.GARG	08−01−2016
1. ALL DIMENSIONS ARE IN mm. 2. ROUND OFF ALL SHARP CORNERS WITH 0.40 mm. 3. TOLERANCES WILL BE AS PER IS:3965−1981 UNLESS OTHERWISE SPECIFIED		SCALE		2:1
		AREA mm^2		162.058
		PERIMETER mm.		200.71
PARTY'S NAME	RAPIDSTALL, BANGALORE	WEIGHT kg/m		0.438
		DRAWING No.		SECTION No.
PARTY'S DRAWING No.	AS PER SAMPLE	P−15470		−
		S4820		S4820
ALLOY & TEMPER	HE9 WP			
DESCRIPTION	MISC. SECTION			