P−15712
S4905

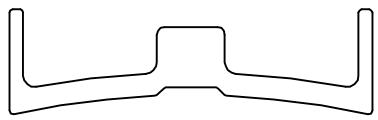

1:1

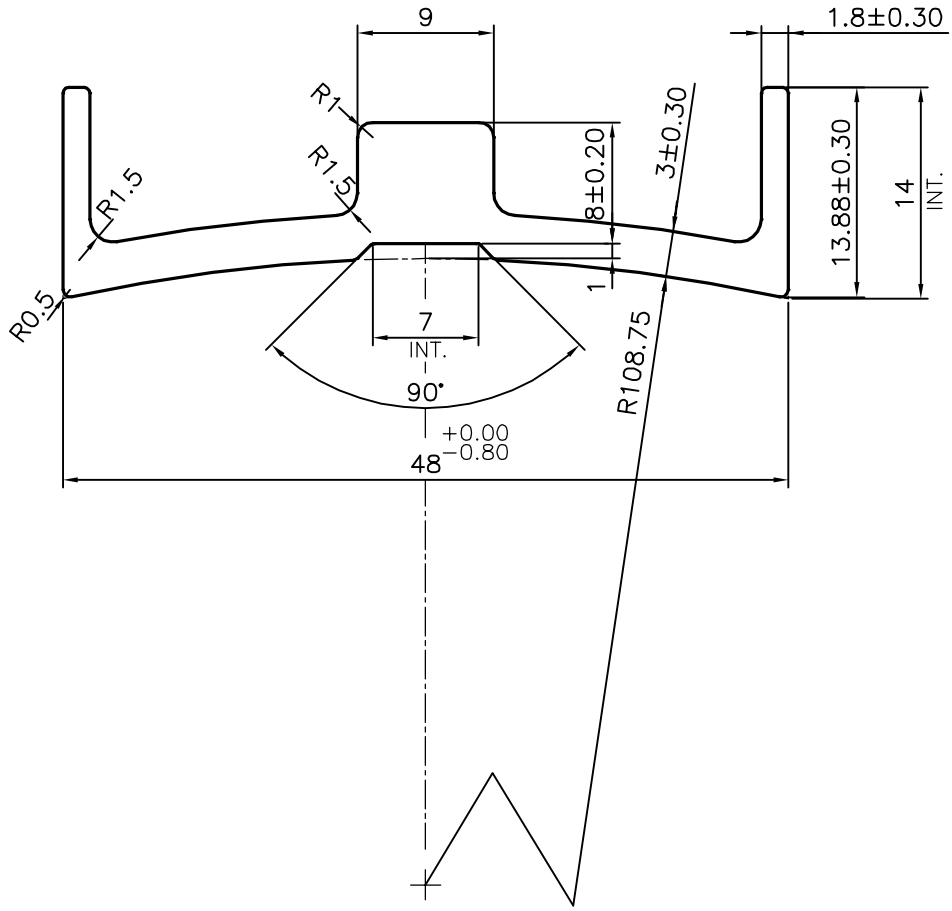

JINDAL SYMBOL OF QUALITY AN ISO 9001 COMPANY	*JINDAL ALUMINIUM LTD.* *BANGALORE−560073 (INDIA)*		NAME	DATE
		DRAWN	J.P.KAUSHIK	23−03−2016
		CHECKED		
		APPROVED	S.S. GARG	11−04−2016
1. ALL DIMENSIONS ARE IN mm. 2. ROUND OFF ALL SHARP CORNERS WITH 0.40 mm. 3. TOLERANCES WILL BE AS PER, IS:3965−1981 UNLESS OTHERWISE SPECIFIED		SCALE		2:1
		AREA mm^2		231.39
		PERIMETER mm.		153.415
		WEIGHT kg/m		0.625
PARTY'S NAME	HAMAR ENGINEERING, RAJKOT	DRAWING No.		SECTION No.
PARTY'S DRAWING No.	S050305	P−15712		−
ALLOY & TEMPER	HE30 WP	S4905		S4905
DESCRIPTION	SUB. HANDLE BRACKET SECTION			