P–15803
S4922

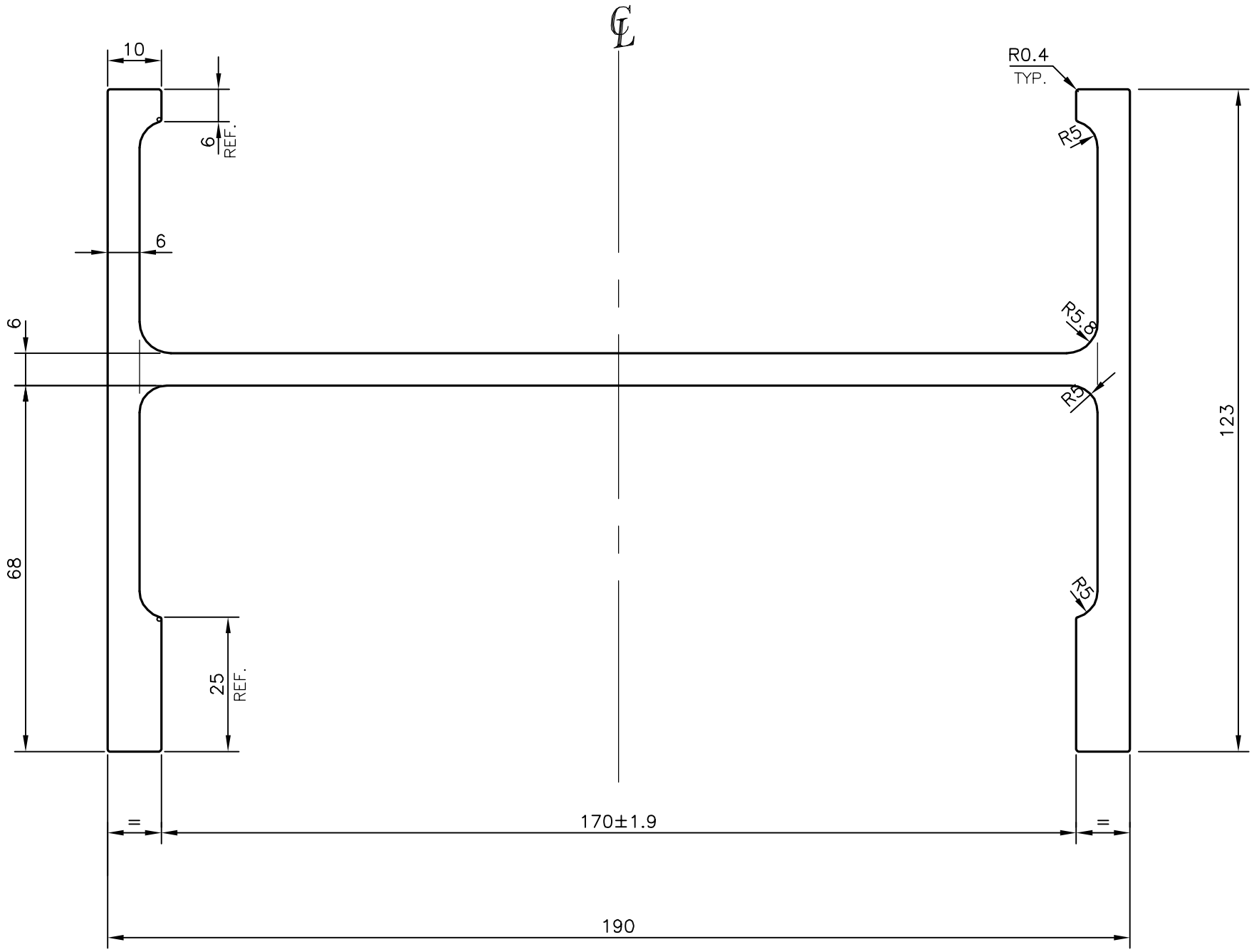

JINDAL SYMBOL OF QUALITY AN ISO 9001 COMPANY	*JINDAL ALUMINIUM LTD.* *BANGALORE–560073 (INDIA)*		NAME	DATE
		DRAWN	J.P.KAUSHIK	25–04–2016
		CHECKED		
		APPROVED	S.S. GARG	02–05–2016
1. ALL DIMENSIONS ARE IN mm. 2. ROUND OFF ALL SHARP CORNERS WITH 0.40 mm. 3. TOLERANCES WILL BE AS PER IS:3965–1981 UNLESS OTHERWISE SPECIFIED		SCALE		1:1
		AREA mm^2		2835.19
		PERIMETER mm.		872.759
		WEIGHT kg/m		7.655
PARTY'S NAME	JASH ENGINEERING LTD.,INDORE	DRAWING No.		SECTION No.
PARTY'S DRAWING No.	JE/SG/GEN/1456	P–15803		–
ALLOY & TEMPER	6061 T6	S4922		S4922
DESCRIPTION	SL SIDE GUIDE FRAME SECTION			