P−15989−1
S5039

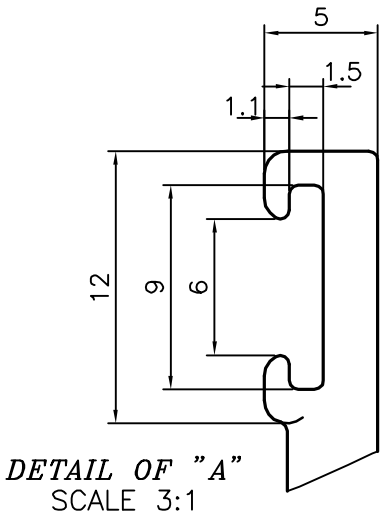

DETAIL OF "A"
SCALE 3:1

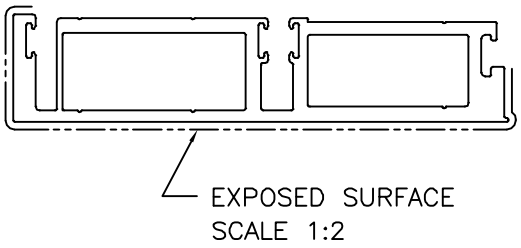

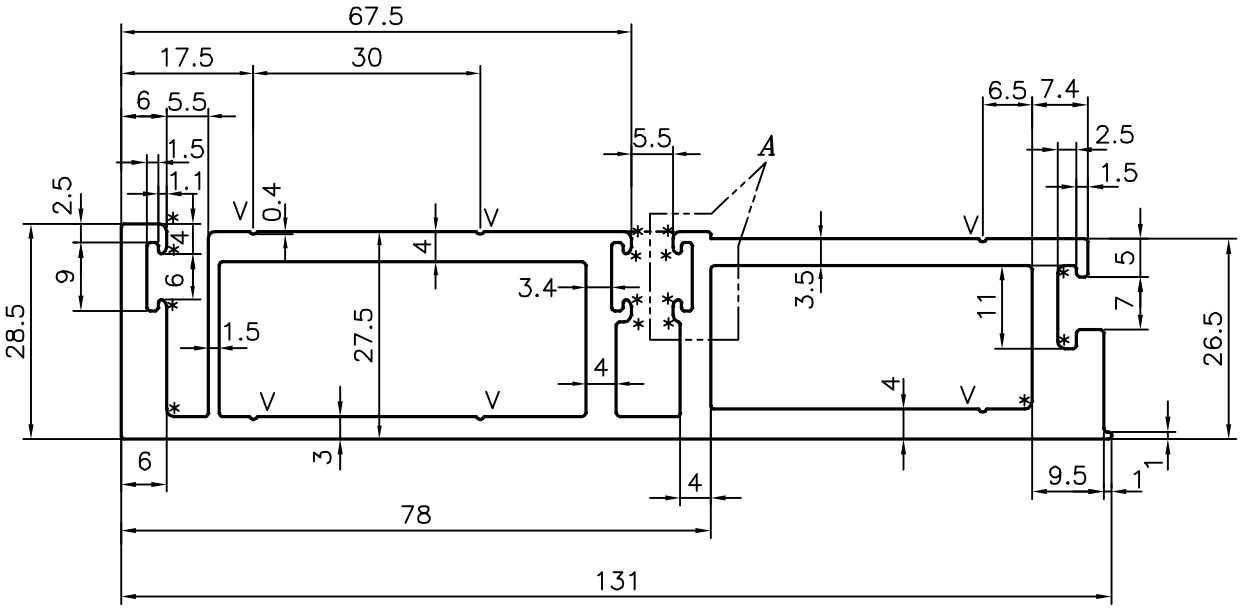

TOLERANCE ON THICKNESS $^{+0.30}_{-0.10}$

ANGULARITY= ±2°

V = VEE GROOVE 0.40x90° (6 PLACES)
* = 1.0 RADIUS (15 PLACES)

			NAME	DATE
SYMBOL OF QUALITY AN ISO 9001 COMPANY	*JINDAL ALUMINIUM LTD.* *BANGALORE−560073 (INDIA)*	DRAWN	RAGHAVENDRA	29−06−2016
		CHECKED		
		APPROVED	S.S. GARG	21−07−2016

1. ALL DIMENSIONS ARE IN mm.
2. ROUND OFF ALL SHARP CORNERS WITH 0.40 mm.
3. TOLERANCES WILL BE AS PER IS:6477−1983, UNLESS OTHERWISE SPECIFIED

SCALE	1:1
AREA mm^2	1295.131
PERIMETER mm.	461.279
WEIGHT kg/m	3.497

		DRAWING No.	SECTION No.
PARTY'S NAME	OMKAR REALTORS & DEVELOPERS PVT. LTD., MUMBAI		
PARTY'S DRAWING No.	AS PER AUTOCAD DRAWING−AP−1619−R3	P−15989−1	−
ALLOY & TEMPER	6063 T6	S5039	S5039
DESCRIPTION	CURTAIN WALL SECTION		